L6460

SPI configurable stepper and DC multi motor driver

Features

- Operating supply voltage from 13 V to 38 V
- 4 full bridge driver configurable in multi-motor application to drive:
  - 2 DC and 1 stepper motor
  - 4 DC motor
- Bridge 1 and 2 (R_{DSon} = 0.60 Ω) can be configured to work as:
  - Dual full bridge driver
  - Super DC driver
  - 2 half bridge driver
  - 1 super half bridge
  - 2 power switches
  - 1 super power switch
- Bridge 3 and 4 (R_{DSon} = 0.85 Ω) can be configured to work as:
  - Same as bridges 1 and 2, listed above
  - Stepper motor driver: up to 1/16 microstepping
  - 2 buck regulators (bridge 3)
  - 1 super buck regulator
  - Battery charger (bridge 4)
- Power supply management
  - One switching buck regulator
  - One switching regulator controller
  - One linear regulator
  - One battery charger
- Fully protected through
  - Thermal warning and shutdown
  - Overcurrent protection
  - Undervoltage lock-out
- SPI interface
- Programmable watchdog function
- Integrated power sequencing and supervisory functions with fault signaling through serial interface and external reset pin
- Very low power dissipation in shut-down mode (~35 mW)

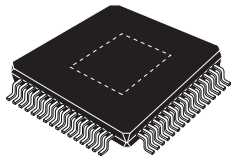

TQFP64 exposed pad

- Auxiliary features
  - Multi-channels 9 bit ADC
  - 2 operational amplifiers
  - Digital comparator
  - 2 low voltage power switches
  - 3 general purpose PWM generators
  - 14 GPIOs

Description

The L6460 is optimized to control and drive multi-motor system providing a unique level of integration in term of control, power and auxiliary features. Thanks to the high configurability L6460 can be customized to drive different motor architectures and to optimize the number of embedded features, such as the voltage regulators, the high precision A/D converter, the operational amplifier and the voltage comparators. The possibility to drive simultaneously stepper and DC motor makes L6460 the ideal solution for all the application featuring multi motors.

Table 1. Device summary

Order code	Package	Packing
L6460	TQFP64	Tray
L6460TR		Tape and reel

Contents

1 General description 10

1.1 Overview 10

1.2 Pin connection 11

1.3 Pin list 12

2 L6460's main features 14

3 Electrical specifications 16

3.1 Absolute maximum rating 16

3.2 Operating ratings specifications 16

3.3 Electrical characteristics 17

4 Internal supplies 30

4.1 $V_{SupplyInt}$ regulator 30

4.2 Charge pump regulator 31

4.3 V3v3 regulator 31

5 Supervisory system 32

5.1 Power on reset (POR) circuit 32

5.2 nRESET generation circuit 32

5.3 Thermal shut down generation circuit 35

6 Watchdog circuit 36

7 Internal clock oscillator 38

8 Start-up configurations 39

8.1 Operation modes 39

8.2 Basic device mode 40

8.3 Slave device mode 41

8.4 Master device mode 41

8.5 Single device mode 41

8.6 Sub-configurations for slave, master or single device modes 41

8.6.1 Bridge mode 41
8.6.2 Primary regulator mode (KP) 42
8.6.3 Regulators mode 42
8.6.4 Simple regulator mode (KT) 42
8.6.5 Bridge + V_{EXT} mode 42
8.6.6 Secondary regulators mode 43

9 Power sequencing 44

10 Power saving modes 45
10.1 Standby mode 45
10.2 Hibernate mode 46
10.3 Low power mode 46
10.4 nAWAKE pin 46

11 Linear main regulator 48

12 Main switching regulator 50
12.1 Pulse skipping operation 50

13 Switching regulator controller 52
13.1 Pulse skipping operation 53
13.2 Output equivalent circuit 54
13.3 Switching regulator controller application considerations 54

14 Power bridges 56
14.1 Possible configurations 59
14.1.1 Full bridge 60
14.1.2 Parallel configuration (super bridge) 61
14.1.3 Half bridge configuration 61
14.1.4 Switch configuration 63
14.1.5 Bipolar stepper configuration 63
14.1.6 Synchronous buck regulator configuration (Bridge 3) 73
14.1.7 Regulation loop 75
14.1.8 Battery charger or switching regulator (Bridge 4) 76

15 AD converter 80

15.1 Voltage divider specifications 84

16 Current DAC circuit 85

17 Operational amplifiers 87

18 Low voltage power switches 89

19 General purpose PWM 90

19.1 General purpose PWM generators 1 and 2 (AuxPwm1 and AuxPwm2) . 90

19.2 Programmable PWM generator (GpPwm) 90

20 Interrupt controller 91

21 Digital comparator 93

22 GPIO pins 95

22.1 GPIO[0] 99

22.2 GPIO[1] 101

22.3 GPIO[2] 103

22.4 GPIO[3] 105

22.5 GPIO[4] 107

22.6 GPIO[5] 109

22.7 GPIO[6] 111

22.8 GPIO[7] 113

22.9 GPIO[8] 115

22.10 GPIO[9] 117

22.11 GPIO[10] 119

22.12 GPIO[11] 121

22.13 GPIO[12] 123

22.14 GPIO[13] 125

22.15 GPIO[14] 127

23 Serial interface 129

23.1 Read transaction 129

23.2 Write transaction 130

24 Registers list 132

25 Schematic examples 135

26 Package mechanical data 137

27 Revision history 138

List of tables

Table 1. Device summary . . . 1
Table 2. Pins configuration . . . 12
Table 3. Absolute maximum ratings . . . 16
Table 4. IC operating ratings . . . 16
Table 5. Electrical characteristics . . . 17
Table 6. Stretch time selection . . . 33
Table 7. Watchdog timeout specifications . . . 37
Table 8. Possible start-up pins state symbol . . . 39
Table 9. Start-up correspondence . . . 40
Table 10. Main switching regulator PWM specification. . . . 51
Table 11. Main switching regulator current limit . . . 51
Table 12. Switching regulator controller PWM specification . . . 53
Table 13. Switching regulator controller application: feedback reference. . . . 54
Table 14. PWM selection truth table for bridge 1 or 2 . . . 57
Table 15. PWM selection truth table for bridge 3 or 4 . . . 57
Table 16. Bridge selection . . . 59
Table 17. Bridge 3 and 4 configuration . . . 59
Table 18. Full bridge truth table . . . 60
Table 19. Half bridge truth table . . . 62
Table 20. Switch truth table . . . 63
Table 21. Sequencer driver . . . 66
Table 22. Stepper driving mode . . . 66
Table 23. Stepper sequencer direction . . . 67
Table 24. DAC . . . 68
Table 25. Internal sequencer . . . 69
Table 26. Stepper off time . . . 71
Table 27. Stepper fast decay . . . 73
Table 28. PWM specification . . . 75
Table 29. Battery charger regulator controller PWM specification . . . 79
Table 30. ADC truth table . . . 81
Table 31. Channel addresses . . . 82
Table 32. ADC sample times when working as a 8-bit ADC. . . . 83
Table 33. ADC sample time when working as a 9-bit ADC. . . . 83
Table 34. Voltage divider specification . . . 84
Table 35. Current DAC truth table . . . 86
Table 36. Interrupt controller event . . . 91
Table 37. Comparison type truth table . . . 94
Table 38. DataX selection truth table . . . 94
Table 39. GPIO functions description . . . 95
Table 40. Abbreviations . . . 97
Table 41. GPIO[0] truth table . . . 99
Table 42. GPIO[1] truth table . . . 101
Table 43. GPIO[2] truth table . . . 103
Table 44. GPIO[3] truth table . . . 105
Table 45. GPIO[4] truth table . . . 107
Table 46. GPIO[5] truth table . . . 109
Table 47. GPIO[6] truth table . . . 111
Table 48. GPIO[7] truth table . . . 113
Table 49. GPIO[8] truth table . . . 115

Table 50. GPIO[9] truth table 117
Table 51. GPIO[10] truth table 119
Table 52. GPIO[11] truth table 121
Table 53. GPIO[12] truth table 123
Table 54. GPIO[13] truth table 125
Table 55. GPIO[14] truth table 127
Table 56. Register address map. 132
Table 57. Document revision history 138

List of figures

Figure 1. Block diagram . . . 10
Figure 2. Pin connection . . . 11
Figure 3. $V_{SupplyInt}$ pin . . . 30
Figure 4. Charge pump block diagram . . . 31
Figure 5. nReset generation circuit . . . 34
Figure 6. Watchdog circuit block diagram . . . 36
Figure 7. Standby mode function description . . . 45
Figure 8. nAWAKE function block diagram . . . 47
Figure 9. Linear main regulator . . . 48
Figure 10. Linear main regulator with external bipolar for high current . . . 49
Figure 11. Main switching regulator functional blocks . . . 51
Figure 12. Switching regulator controller functional blocks . . . 53
Figure 13. Switching regulator controller output driving: equivalent circuit . . . 54
Figure 14. H Bridge block diagram . . . 56
Figure 15. Bridge 1 and 2 PWM selection . . . 58
Figure 16. Super bridge configuration . . . 61
Figure 17. Half bridge configuration . . . 62
Figure 18. Bipolar stepper configuration . . . 65
Figure 19. Regulator block diagram . . . 74
Figure 20. Internal comparator functional block diagram . . . 75
Figure 21. Battery charger control loop block diagram . . . 76
Figure 22. Li-ion battery charge profile . . . 77
Figure 23. Simple buck regulator . . . 78
Figure 24. A2D block diagram . . . 81
Figure 25. Current DAC block diagram . . . 85
Figure 26. Configurable 3.3 V operational amplifiers . . . 87
Figure 27. Low power switch block diagram . . . 89
Figure 28. Interrupt controller diagram . . . 91
Figure 29. Digital comparator block diagram . . . 94
Figure 30. GPIO[0] block diagram . . . 100
Figure 31. GPIO[1] block diagram . . . 102
Figure 32. GPIO[2] block diagram . . . 104
Figure 33. GPIO[3] block diagram . . . 106
Figure 34. GPIO[4] block diagram . . . 108
Figure 35. GPIO[5] block diagram . . . 110
Figure 36. GPIO[6] block diagram . . . 112
Figure 37. GPIO[7] block diagram . . . 114
Figure 38. GPIO[8] block diagram . . . 116
Figure 39. GPIO[9] block diagram . . . 118
Figure 40. GPIO[10] block diagram . . . 120
Figure 41. GPIO[11] block diagram . . . 122
Figure 42. GPIO[12] block diagram . . . 124

Figure 43. GPIO[13] block diagram 126
Figure 44. GPIO[14] block diagram 128
Figure 45. SPI read transaction 130
Figure 46. SPI write transaction 130
Figure 47. SPI input timing diagram 131
Figure 48. SPI output timing diagram 131
Figure 49. Application with 2 DC motors, 1 stepper motor and 3 power supplies 135
Figure 50. Application with 2 DC motors, a battery charger and 5 power supplies 136
Figure 51. TQFP64 mechanical data an package dimensions 137

1 General description

1.1 Overview

L6460 offers the possibility to control and power multi motor systems, through the management of simultaneous driving of stepper and DC motor. A number of features can be configured through the digital interface (SPI), including 3 voltage regulators, 1 high precision A/D converter, 2 operational amplifiers and 14 configurable GPIOs.

The high flexibility allows the possibility to configure two, one full or half bridge to work as power stage featuring additional voltage buck regulators.

Figure 1. Block diagram

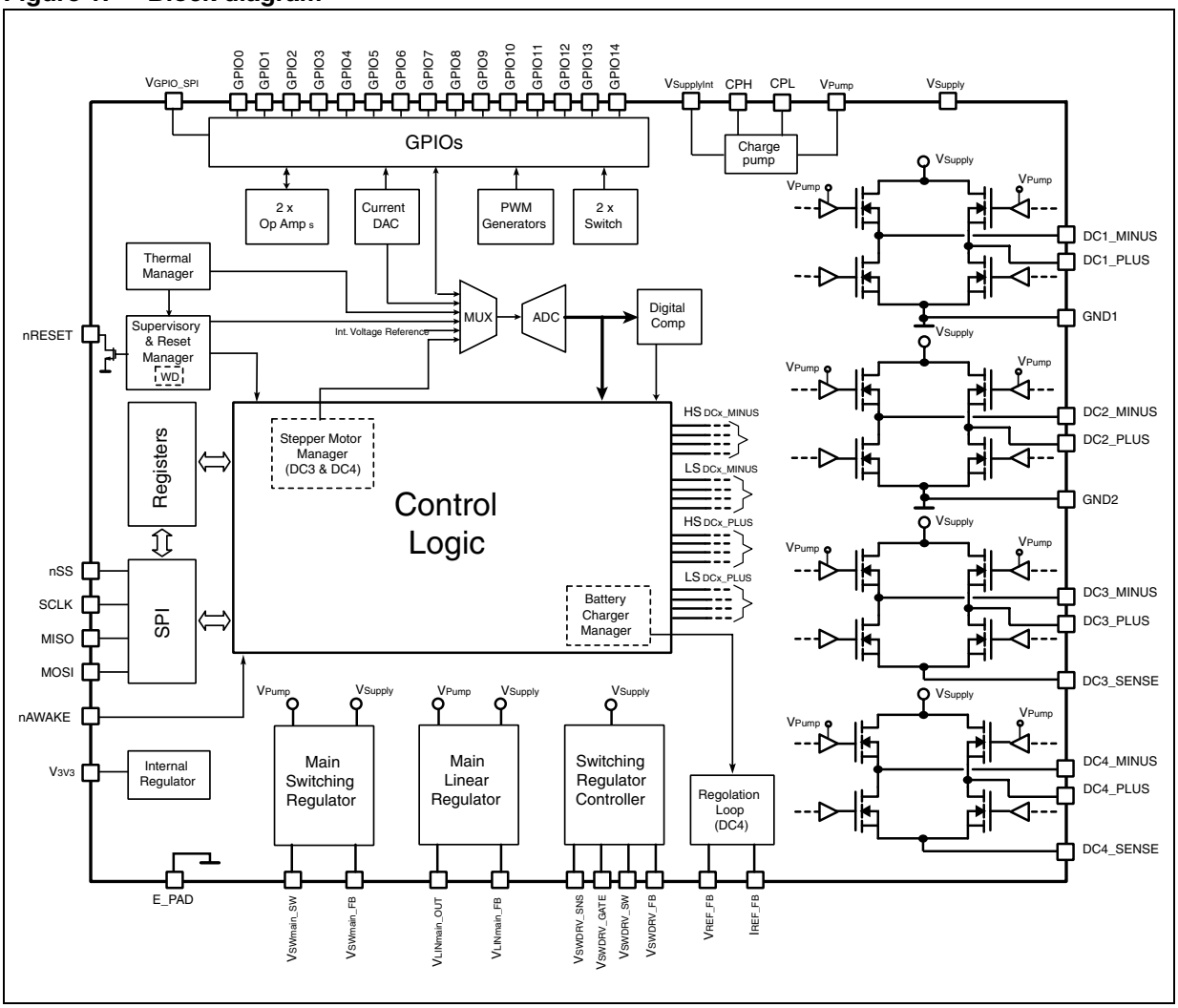

Note: See following Chapter 2 for a detailed description of possible configurations.

1.2 Pin connection

Figure 2. Pin connection

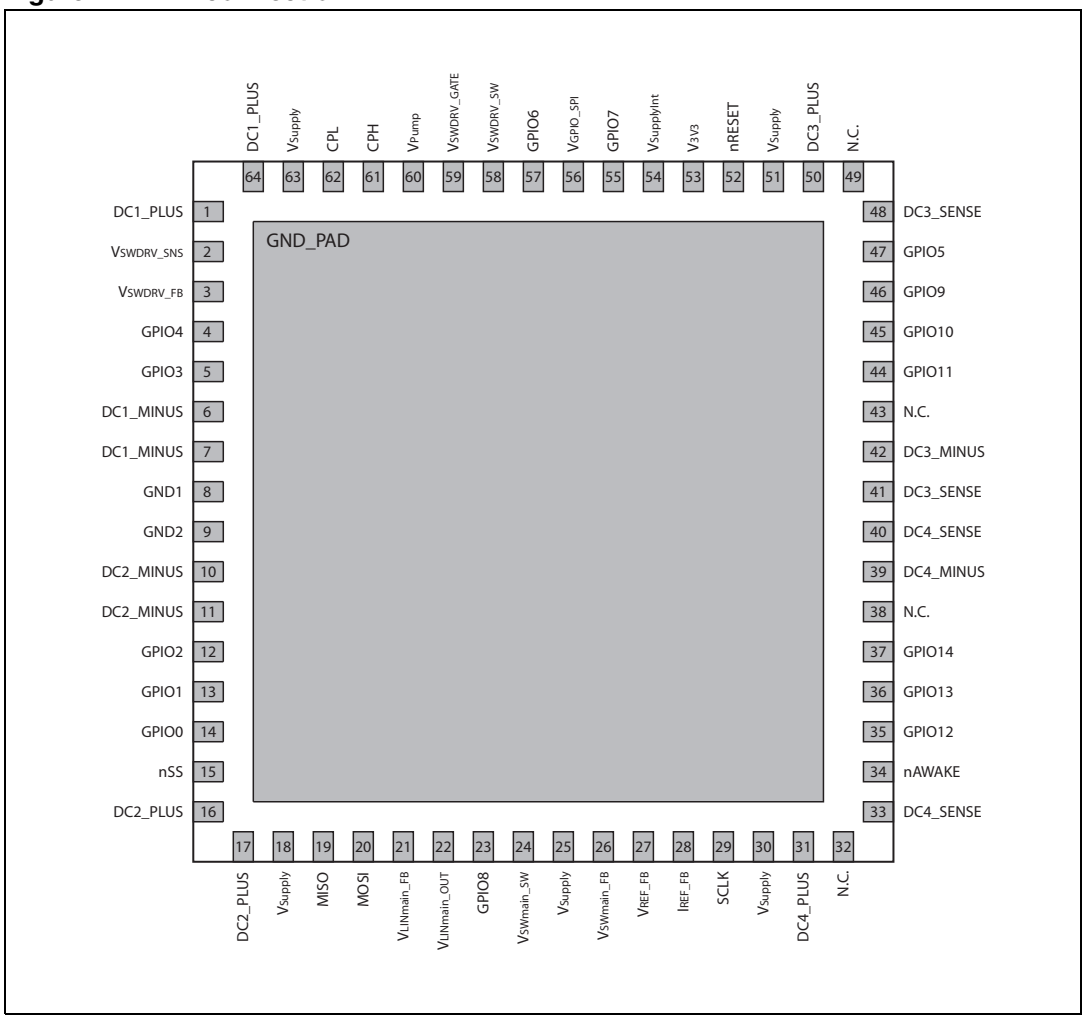

1.3 Pin list

Table 2. Pins configuration

Pin #	Pin name	Description	Type
1	DC1_PLUS	Bridge 1 phase “plus” output	Output
2	V_{SWDRV_SNS}	Switching regulator controller sense	Analog input
3	V_{SWDRV_FB}	Switching regulator controller feedback	Analog input
4	GPIO4	General purpose I/O	Analog In/Out - CMOS bi-dir
5	GPIO3	General purpose I/O	Analog In/Out - CMOS bi-dir
6	DC1_MINUS	Bridge 1 phase “minus” output	Output
7	DC1_MINUS	Bridge 1 phase “minus” output	Output
8	GND1	Ground pin for bridge1(1)(2)(3)	Power/digital
9	GND2	Ground pin for bridge2(1)(2)(3)	Power/digital
10	DC2_MINUS	Bridge 2 phase “minus” output	Output
11	DC2_MINUS	Bridge 2 phase “minus” output	Output
12	GPIO2	General purpose I/O	Analog In/Out - CMOS bi-dir
13	GPIO1	General purpose I/O	Analog In/Out - CMOS bi-dir
14	GPIO0	General purpose I/O	Analog Input - CMOS input
15	nSS	SPI chip select pin	CMOS input
16	DC2_PLUS	Bridge 2 phase “plus” output	Output
17	DC2_PLUS	Bridge 2 phase “plus” output	Output
18	V_{Supply}	Main voltage supply	Power input
19	MISO	SPI serial data output	CMOS output
20	MOSI	SPI serial data input	CMOS input
21	$V_{LINmain\_FB}$	Linear main regulator feedback	Analog input
22	$V_{LINmain\_OUT}$	Linear main regulator output	Power output
23	GPIO 8	General purpose I/O	Analog In/Out - CMOS bi-dir
24	V_{SWmain_SW}	Main switching regulator switching output	Power output
25	V_{Supply}	Main voltage supply	Power Input
26	V_{SWmain_FB}	Main switching regulator feedback pin	Analog input
27	V_{REF_FB}	Regulator voltage feedback	Analog input
28	I_{REF_FB}	Regulator current feedback	Analog input
29	SCLK	SPI input clock pin	CMOS input
30	V_{Supply}	Main voltage supply	Power input
31	DC4_PLUS	Bridge 4 phase “plus” output	Output
32	N.C.	Not connected	
33	DC4_SENSE	Bridge 4 sense output(4)	Output
34	nAWAKE	Device wake up	CMOS input

Table 2. Pins configuration (continued)

Pin #	Pin name	Description	Type
35	GPIO12	General purpose I/O	Analog In/Out - CMOS bi-dir
36	GPIO13	General purpose I/O	Analog In/Out - CMOS bi-dir
37	GPIO14	General purpose I/O	Analog In/Out - CMOS bi-dir
38	N.C.	Not connected	
39	DC4_MINUS	Bridge 4 phase “minus” output	Output
40	DC4_SENSE	Bridge 4 sense output(4)	Output
41	DC3_SENSE	Bridge 3 sense output(4)	Output
42	DC3_MINUS	Bridge 3 phase “minus” output	Output
43	N.C.	Not connected	
44	GPIO11	General purpose I/O	Analog In/Out - CMOS bi-dir
45	GPIO10	General purpose I/O	Analog In/Out - CMOS bi-dir
46	GPIO9	General purpose I/O	Analog In/Out - CMOS bi-dir
47	GPIO5	General purpose I/O	Analog In/Out - CMOS bi-dir
48	DC3_SENSE	Bridge 3 sense output(4)	Output
49	N.C.	Not connected	
50	DC3_PLUS	Bridge 3 phase “plus” output	Output
51	V_{Supply}	Main voltage supply	Power input
52	nRESET	Open drain system reset pin	CMOS Input/output
53	V_{3v3}	Internal 3.3 volt regulator	Power Input/output
54	$V_{SupplyInt}$	Internal voltage supply	Power Input
55	GPIO7	General purpose I/O	Analog In/Out - CMOS bi-dir
56	V_{GPIO_SPI}	Low voltage pins power supply	Power input
57	GPIO6	General purpose I/O	Analog In/Out - CMOS bi-dir
58	V_{SWDRV_SW}	Switching regulator controller source input	Power input
59	V_{SWDRV_GATE}	Switching driver gate drive pin	Analog output
60	V_{Pump}	Charge pump voltage	Power Input/output
61	CPH	Charge pump high switch pin	Power Input/output
62	CPL	Charge pump low switch pin	Power Input/output
63	V_{Supply}	Main voltage supply	Power input
64	DC1_plus	Bridge 1 phase “plus” output	Output
E_Pad	GND_PAD	(1)(2)(3)	

1. These pins must be connected all together to a unique PCB ground.
2. Bridges1 and 2 have 2 ground pads: one is bonded to the relative ground pin (GND1 or GND2) and the other is connected to exposed pad (E_Pad) ground ring. This makes the bond wires testing possible by forcing a current between E-Pad and GND1 or GND2 pins and using the other pin as sense pin to measure the resistance of E-Pad bonding. (N.B: grounds of two bridges are internally connected together).
3. The analog ground is connected to exposed pad E-Pad.
4. The pin must be tied to ground if bridge is not used as a stepper motor.

2 L6460's main features

L6460 includes the following circuits:

- Four widely configurable full bridges:
  - Bridges 1 and 2:
    - Diagonal R_{DSon}: 0.6 Ω typ.
    - Max operative current = 2.5 A.
  - Bridges 3 and 4:
    - Diagonal R_{DSon}: 0.85 Ω typ.
    - Max operative current = 1.5 A.
- Possible configurations for each bridge are the following:
  - Bridge 1:
    - DC motor driver.
    - Super DC (bridge 1 and 2 paralleled form superbridge1).
    - 2 independent half bridges.
    - 1 super half bridge (bridge 1 side A and bridge 1 side B paralleled form superhalfbridge1).
    - 2 independent switches (high or low side).
    - 1 super switch (high or low side).
  - Bridge 2 has the same configurations of bridge 1.
  - Bridge 3 has the same configurations of bridge 1 (bridge 3 and 4 paralleled form superbridge2) plus the following:
    - ½ stepper motor driver.
    - 2 buck regulators (V_{AUX1_SW}, V_{AUX2_SW}).
    - 1 Super buck regulator ($V_{AUX1//2\_SW}$).
  - Bridge 4 has the same configurations of bridge 1 plus the following:
    - ½ stepper motor driver.
    - 1 super buck regulator (V_{AUX3_SW}).
    - Battery charger.
- One buck type switching regulator (V_{SWmain}) with:
  - Output regulated voltage range: 1-5 Volts.
  - Output load current: 3.0 A.
  - Internal output power DMOS.
  - Internal soft start sequence.
  - Internal PWM generation.
  - Switching frequency: ~250 kHz.
  - Pulse skipping strategy control.
- One switching regulator controller (V_{SWDRV}) with:
  - Output regulated voltage range: 1-30 Volts.
  - Selectable current limitation.
  - Internal PWM generation.
  - Pulse skipping strategy control.
- One linear regulator ($V_{LINmain}$) that can be used to generate low current/low ripple

voltages. This regulator can be used to drive an external bipolar pass transistor to generate high current/low ripple output voltages.

- One bidirectional serial interface with address detection so that different ICs can share the same data bus.
- Integrated power sequencing and supervisory functions with fault signaling through serial interface and external reset pin.
- Fourteen general purpose I/Os that can be used to drive/read internal/external analog/logic signals.
- One 8-bit/9-bit A/D converter (100 kS/s @ 9-bit, 200 kS/s @8-bit). It can be used to measure most of the internal signals, of the input pins and a voltage proportional to IC temperature.
  - Current sink DAC:
  - Three output current ranges: up to 0.64/6.4/64 mA.
  - 64 (6-bit programmable) available current levels for each range.
  - 5 V output tolerant.
- Two operational amplifiers:
  - 3.3 V supply, rail to rail input compatibility, internally compensated.
  - They can have all pins externally accessible or can be internally configured as a buffer o make internal reference voltages available outside of the chip.
  - Unity gain bandwidth > 1 MHz.
  - They can also be set as comparators with 3.3 V input compatibility and low offset.
- Two 3.3 V pass switches with 1 Ω R_{DSon} and short circuit protected.
- Programmable watchdog function.
- Thermal shutdown protection with thermal warning capability.
- Very low power dissipation in “low power mode” (~35 mW)

L6460 is intended to maximize the use of its components, so when an internal circuit is not used it could be employed for other applications. Bridge 3, for example, can be used as a full bridge or to implement two switching regulators with synchronous rectification: to obtain this flexibility L6460 includes 2 separate regulation loops for these regulators; when the bridge is used as a motor driver, the 2 regulation loops can be redirected on general purpose I/Os to leave the possibility to assembly a switching regulator by only adding an external FET.

3 Electrical specifications

3.1 Absolute maximum rating

The following specifications define the maximum range of voltages or currents for L6460.

Stresses above these absolute maximum specifications may cause permanent damage to the device. Exposure to absolute maximum ratings for extended periods may affect device reliability.

Table 3. Absolute maximum ratings

Parameter	Description	Test condition	Min	Max	Unit
V_{Supply}	V_{Supply} voltage			40	V
V_{GPIO_SPI}	V_{GPIO_SPI} voltage			3.9	V
V_{3V3pin}	V_{3V3} voltage		-0.3	3.9	V
V_{SW}	Switching regulators output pin voltage range		-1	V_{Supply}	V
V_{SW_pulse}	Switching regulators min pulsed voltage	tpulse < 500ns	-3		V
V_{Pump}	Charge pump voltage	(1)		15	V
T_J	Junction temperature(2)	Storage	-40	190	°C
		Operating	-40	TSD	°C

1. This value is useful to define the voltage rating for external capacitor to be connected from V_{Pump} to V_{Supply}. V_{Pump} is internally generated and can never be supplied by external voltage source nor is intended to provide voltage to external loads.
2. TSD is the thermal shut down temperature of the device.

3.2 Operating ratings specifications

Table 4. IC operating ratings

Parameter	Description	Test condition	Min	Max	Unit
V_{Supply}	V_{Supply} voltage range		13 (1)	38	V
I_{Supply}	V_{Supply} operative current	(2)		15	mA
I_{Shut_down}	V_{Supply} shut down state current			1.5	mA
V_{GPIO_SPI}	V_{GPIO_SPI} voltage range		2.4	3.6	V
I_{VGPIO_SPI}	V_{GPIO_SPI} operative current	(3)		0.4	mA
V_{3v3}	3.3V input pin voltage range			3.6	V
$V_{LINmain\_OUT}$	Output pin voltage range	(4)	0	V_{Supply}	V
$V_{LINmain\_FB}$	Feedback pin voltage range		0	3.6	V
V_{SWmain_SW}	Output pin voltage range	(4)	-1	V_{supply}	V
V_{SWDRV_SW}	V_{SWDRV_SW} pin voltage range	(4)	-1	V_{Supply}	V

Table 4. IC operating ratings

Parameter	Description	Test condition	Min	Max	Unit
V_{SWDRV_GATE}	Gate drive pin voltage		0	V_{Pump}	V
V_{SWDRV_SNS}	Sense pin voltage		V_{Supply} -3V	V_{Supply}	V
T_J	Junction temperature	Operating	-40	125	°C

1. For V_{supply} lower than 21 V an external resistor between V_{supply} and $V_{supply\ Int}$ pins are required. For V_{supply} lower than 15 V external diodes for charge pump are required.
2. Operating supply current is measured with system regulators operating but not loaded.
3. Operating V_{GPIO_SPI} current is measured with all circuits supplied by V_{GPIO_SPI} (GPIO's, operational amplifiers and pass switches) enabled but not loaded.
4. The external components connected to the pin must be chosen to avoid that the voltage exceeds this operative range.

3.3 Electrical characteristics

Table 5. Electrical characteristics

Parameter	Description	Test condition	Min	Typ	Max	Unit
$V_{SupplyInt}$ regulator						
V_{S_Int}	$V_{SupplyInt}$ output voltage	(1)	18	19.5	21	V
I_{S_Int}	$V_{SupplyInt}$ operative current	(2)		11		mA
Charge pump V_{Pump}						
V_{Pump}	Charge pump voltage	V_{Supply}=32V	V_{Supply} + 10.5	V_{Supply} +12.5	V_{Supply} + 14.5	V
F_{Pump}	V_{Pump} clock frequency	F_{OSC} = 16MHz typ		$F_{OSC}/64$		kHz
V3V3 regulator						
V_{3V3}	V_{3v3} output voltage	V_{Supply}=32V	3.15	3.3	3.45	V
Power on reset						
$V_{Supply\_POR\_valid}$	V_{Supply} voltage for POR valid	I_{nRESET} = 1mA	4			V
$V_{Supply\_POR\_fall}$	V_{Supply} POR falling threshold	V_{Supply} falling	6		8	V
$t_{Supply\_POR\_filt}$	V_{Supply} POR filter Time			3		µs
$V_{3V3\_POR\_fall}$	V_{3v3} POR falling threshold	V_{3V3} falling	1.9	2.2		V
$V_{3V3\_POR\_rise}$	V_{3v3} POR rising threshold	V_{3V3} rising		2.7		V
$V_{3V3\_POR\_hys}$	V_{3v3} POR hysteresis			0.5		V
$t_{3V3\_POR\_filt}$	V_{3v3} POR filter time			1.5		µs
nRESET circuit						
V_{nRST_L}	nRESET low level output voltage	I=10mA			0.4	V

Table 5. Electrical characteristics (continued)

Parameter	Description	Test condition	Min	Typ	Max	Unit
t_{nRST_fall}	nRESET fall time	I=1mA C=50pF(3)			15	ns
t_{nRST_del}	nRESET delay time	(4)			150	ns
$V_{Supply\_UV\_f}$	V_{Supply} falling threshold		10.2	11	11.8	V
$V_{Supply\_UV\_r}$	V_{Supply} rising threshold		10.5	11.5	12.5	V
$V_{Supply\_UV\_hys}$	V_{Supply} hysteresis		0.3	0.5	0.7	V
t_{Supply_UV}	V_{Supply} UV filter time			3.5		µs
$V_{S\_Int\_UV\_f}$	$V_{SupplyInt}$ falling threshold		9.7	10.7	11.7	V
$V_{S\_Int\_UV\_r}$	$V_{SupplyInt}$ rising threshold		10.6	11.4	12.2	V
$V_{S\_Int\_UV\_hys}$	$V_{SupplyInt}$ hysteresis		0.4	0.7	1	V
$t_{S\_Int\_UV}$	$V_{SupplyInt}$ UV filter time			3.5		µs
$V_{Pump\_UV\_f}$	V_{Pump} falling threshold		V_{Supply} +7	V_{Supply} + 7.5	V_{Supply} + 8	V
$V_{Pump\_UV\_r}$	V_{Pump} rising threshold		V_{Supply} + 7.5	V_{Supply} + 8	V_{Supply} + 8.5	V
$V_{Pump\_UV\_hys}$	V_{Pump} hysteresis		0.3	0.5	0.7	V
t_{Pump_UV}	V_{Pump} UV filter time			3.5		µs
$V_{GPIO\_SPI\_UV\_f}$	V_{GPIO_SPI} falling threshold		1.8	2		V
$V_{GPIO\_SPI\_UV\_r}$	V_{GPIO_SPI} rising threshold			2.2	2.4	V
$V_{GPIO\_SPI\_hys}$	V_{GPIO_SPI} hysteresis		200	250	300	mV
$t_{GPIO\_SPI\_UV}$	V_{GPIO_SPI} UV filter time			3.5		µs
TSD circuit						
T_{TSD}	Thermal shut down temperature			170		°C
T_{WARM}	Warming temperature			140		°C
T_{DIFF}	Thermal shut down to warming difference			30		°C
t_{TSD_FILT}	Thermal shut down filter time			8		µs
t_{WARM_FILT}	Warming filter time			8		µs
Watchdog						
WD_T_{clk}	Watchdog clock period			$T_{osc} * 2^{22}$		s
Internal clock						
F_{osc}	Oscillator frequency	V_{3V3} = 3.3 V	14.1	16	17.6	MHz
nAWAKE function						
V_{IL}	nAWAKE low logic level voltage				0.8	V

Table 5. Electrical characteristics (continued)

Parameter	Description	Test condition	Min	Typ	Max	Unit
V_{IH}	nAWAKE high logic level voltage		1.6			V
V_{HYS}	nAWAKE input hysteresis			0.25		V
I_{OUT}	nAWAKE pin output current	nAWAKE=0V(5)	-0.72		-2	mA
I_{INP}	nAWAKE pin input current	nAWAKE=0.8V(5)	0.2		0.4	mA
$t_{AWAKEFILT}$	Filter time			1.2		µs
Main linear regulator						
V_{drop}	Drop out voltage	V_{drop}= V_{supply}-$V_{LINmain\_OUT}$	2			V
I_{PD}	Internal switch pull down current	Linear Main Regulator disabled; $V_{LINmain\_OUT}$=1V		3		mA
$V_{LINmain\_Ref}$	Feedback reference voltage		0.776	0.8	0.824	V
$I_{LINmain\_Ref}$	Feedback pin input current		-2		2	µA
$I_{outLINMax}$	Maximum output current	$V_{LINmain\_OUT}$= V_{supply}-2V	10			mA
I_{short}	Output short circuit current	$V_{LINmain\_OUT}$ =0V, $V_{LINmain\_FB}$ =0V	12	24	32	mA
$\Delta V_{out}/V_o$	Load regulation	$0 \leq I_{load} \leq I_{outLINMax}$(6)			0.8	%
$\Delta V_{out}/\Delta V_{Supply}$	Line regulation	I_{load} =10mA(6)			0.2	%
V_{loop_acc}	Loop voltage accuracy			±2.5		%
$V_{LIN\_UV\_f}$	Undervoltage falling threshold	(7)	84.5	87	89.5	%
$V_{LIN\_UV\_r}$	Undervoltage rising threshold	(7)	90.5	93	95.5	%
$V_{LIN\_UV\_hys}$	Undervoltage hysteresis			6		%
t_{prim_uv}	Under voltage deglitch filter			5		µs
Main switching regulator						
V_{FBREF}	Main switching regulator feedback reference voltage	SelFBref = ‘00’	0.776	0.8	0.824	V
		SelFBref = ‘01’ (8)	0.97	1	1.03	V
		SelFBref = ‘10’	2.425	2.5	2.575	V
		SelFBref = ‘11’	2.91	3	3.09	V
I_Q	Output leakage current	$T_{junction}$ = 125°C	-40		+40	µA
I_{Q_LP}	Output leakage current in “low power mode”	V_{Supply} = 36V $T_{junction}$ = 125°C	-15		+15	µA
I_{SWmain_FB}	V_{SWmain_FB} pin current	$T_{junction}$ = 125°C	-10		+10	µA
V_{SWmain_OUT}	Output voltage range	(9)	0.8		5	V
I_{load}	Maximum output load current	V_{Supply} = 36V	0.002		3	A
R_{DSonHS}	Internal high side R_{DSon}	I_{load}=1A $T_{junction}$ = 125°C		0.33	0.95	Ω

Table 5. Electrical characteristics (continued)

Parameter	Description	Test condition	Min	Typ	Max	Unit
V_{loop}	Loop voltage accuracy			±3%		
$V_{SW\_UV\_f}$	Under voltage falling threshold	(10)	84.5	87	89.5	%
$V_{SW\_UV\_r}$	Under voltage rising threshold	(10)	90.5	93	95.5	%
$V_{SW\_UV\_hys}$	Under voltage hysteresis			6		%
t_{prim_uv}	Under voltage deglitch filter			5		µs
I_{limit}	Current limit protection	Selllimit =”0” Selllimit =”1”	3.3 2.3	5 3.5		A A
$t_{deglitch}$	Current limit deglitch time		50			ns
t_{I_lim}	Current limit response time	Normal operating mode (no UV)(11)		450	650	ns
t_{I_limUV}	Current limit response time in UV condition	UV condition (12)		200	400	ns
t_r	Switching output rise time	V_{Supply} = 36V, R_{LOAD} = 422 Ω(13)	5		30	ns
t_f	Switching output fall time	V_{Supply} = 36V, R_{LOAD} = 10 Ω(13)	5		30	ns
F_{SW_PWM}	Operating frequency			Fosc/64		kHz
Switching regulator controller						
V_{GS_ext}	Gate to source voltage for external FET			V_{Pump}		V
I_{SOURCE}	Source current	V_{Pump}=V_{Supply}+12V V_{SWCTR_GATE}=0V	25		50	mA
I_{SINK}	Sink current	V_{SWCTR_GATE} = V_{Supply}	20			mA
t_{SINK}	Sink discharge pulse time			600		ns
$R_{SUSTAIN}$	Gate-source sustain resistance	(V_{SWCTR_GATE} - V_{SWCTR_SRC}) = 0.2V		650		Ω
I_Q	Output leakage current	V_{Supply} = 36V, $T_{junction}$ = 125°C	-40		+40	µA
I_{Q_LP}	Output leakage current in “Low Power Mode”	V_{Supply} = 36V, $T_{junction}$ = 125°C	-5		+5	µA
V_{FBREF}	Switching regulator feedback controller feedback reference voltage	SelFBref = ‘00’ (8)	0.776	0.8	0.824	V
		SelFBref = ‘01’	0.97	1	1.03	V
		SelFBref = ‘10’	2.425	2.5	2.575	V
		SelFBref = ‘11’	2.91	3	3.09	V
I_{SWDRV_FB}	V_{SWDRV_FB} pin current	V_{Supply} = 36V, $T_{junction}$ = 125°C	-10		+10	µA
V_{loop}	Loop voltage accuracy			±3%		

Table 5. Electrical characteristics (continued)

Parameter	Description	Test condition	Min	Typ	Max	Unit
$V_{SWD\_UV\_f}$	Under voltage falling threshold	(14)	84.5	87	89.5	%
$V_{SWD\_UV\_r}$	Under voltage rising threshold	(14)	90.5	93	95.5	%
$V_{SWD\_UV\_hys}$	Under voltage hysteresis			6		%
t_{prim_uv}	Under voltage deglitch filter			5		µs
V_{ovc}	Over current threshold voltage		250	300	350	mV
$t_{deglitch}$	Current limit deglitch time		50			ns
t_{I_lim}	Current limit response time	Normal operating mode (no UV) (11)		500	900	ns
t_{I_limUV}	Current Limit response time in UV condition.	UV condition (12)		380	550	ns
F_{SWD_PWM}	Operating frequency			$F_{osc}/64$		kHz
Power bridges						
R_{DSon1_2}	Bridge 1 and 2 diagonal R_{DSon}	I = 1.4A, V_{Supply} = 36V, $T_{junction}$ = 125°C		0.6	1.1	Ω
R_{DSon3_4}	Bridge 3 and 4 diagonal R_{DSon}	I = 1A, V_{Supply} = 36V, $T_{junction}$ = 125°C		0.85	1.65	Ω
I_{MAX1_2}	Bridge 1 and 2 operative rms current				2.5	A
I_{MAX3_4}	Bridge 3 and 4 operative rms current				1.5	A
I_{dss}	Output leakage current.	$T_{junction}$ = 125°C	-50		+50	µA
I_{Q_LP}	Output leakage current in “low power mode”	V_{Supply} = 36V, $T_{junction}$ = 125°C	-10		+10	µA
$I_{OC\_LS1\_2}$	Low side current protection for bridges 1 and 2(15)	MtrXSideYILimSel[1:0]=00 MtrXSideYILimSel[1:0]=01 MtrXSideYILimSel[1:0]=10 MtrXSideYILimSel[1:0]=11 (16)	0.6 1.4 2.4 2.4	1 2 3 3	1.6 2.6 3.6 3.6	A
$I_{OC\_HS1\_2}$	High side current protection for bridges 1 and 2(15)	MtrXSideYILimSel[1:0]=00 MtrXSideYILimSel[1:0]=01 MtrXSideYILimSel[1:0]=10 MtrXSideYILimSel[1:0]=11(16)	0.7 1.5 2.5 2.5	1 2 3 3	1.7 2.7 3.7 3.7	A
$I_{OC\_LS3\_4}$	Low side current protection for bridges 3 and 4(15)	MtrXSideYILimSel[1:0]=11 (17)(18)	1.55		2.5	A
$I_{OC\_HS3\_4}$	High side current protection for bridges 3 and 4(15)	MtrXSideYILimSel[1:0]=11(17)(18)	1.6		2.5	A
t_{filter}	Current limit filter time		2		5	µs

Table 5. Electrical characteristics (continued)

Parameter	Description	Test condition	Min	Typ	Max	Unit
t_{delay}	Current limit delay time			5		µs
t_{OC_off}	Over current Off time	MtrXIlimitOffTimeY[1:0]=00 MtrXIlimitOffTimeY[1:0]=01 MtrXIlimitOffTimeY[1:0]=10 MtrXIlimitOffTimeY[1:0]=11 (19)		60 120 240 480		µs µs µs µs
t_{r1_2}	Output rise time bridges 1 and 2	V_{Supply} = 36V, resistive load between outputs: R= 25 Ω(20)	100	180	250	ns
t_{r3_4}	Output rise time bridges 3 and 4	V_{Supply} = 36V, resistive load between outputs: R= 36 Ω(20)	50	100	200	ns
t_{f1_2}	Output fall time bridges 1 and 2	V_{Supply} = 36V, resistive load between outputs: R= 25 Ω(20)	100	180	250	ns
t_{f3_4}	Output fall time bridges 3 and 4	V_{Supply} = 36V, resistive load between outputs: R= 36 Ω(20)	50	125	250	ns
$t_{deadRise}$	Anti crossover rising dead time		100	300	450	ns
$t_{deadFall}$	Anti crossover falling dead time		100	300	450	ns
F_{PWM}	Operating frequency			F_{osc}/512		kHz
t_{resp}	Delay from PWM to output transition			500		ns
Bipolar stepper circuitry						
$V_{STEPREF}$	Reference voltage	SelStepRef =0 SelStepRef =1	0.48 0.72	0.50 0.75	0.52 0.78	V
V_{offset}	Sense comparator offset		-12		12	mV
t_{blk}	Blanking time	StepBlkTime = ‘00’ (8)	0.65	0.95	1.25	µs
		StepBlkTime = ‘01’	1	1.45	1.9	µs
		StepBlkTime = ‘10’	1.5	2.25	3	µs
		StepBlkTime = ‘11’	3	4.25	5.5	µs
Synchronous buck regulator (bridge 3)						
V_{AUX_SW}	Output pin voltage range (DC3x)	(26)	-1		V_{Supply}	V
I_Q	Output leakage current	$T_{junction}$ = 125°C	-50		+50	µA
I_{QLP}	Output leakage current in “Low Power Mode”	V_{Supply} = 36V $T_{junction}$ = 125°C	-10		+10	µA

Table 5. Electrical characteristics (continued)

Parameter	Description	Test condition	Min	Typ	Max	Unit
V_{FBREF}	Synchronous buck regulator feedback reference voltage	SelFBRef = '00'	0.776	0.8	0.824	V
		SelFBRef = '01' (21)	0.97	1	1.03	V
		SelFBRef = '10' (22)	2.425	2.5	2.575	V
		SelFBRef = '11'	2.91	3	3.09	V
I_{GPIO_FB}	GPIO feedback pin current	$T_{junction}$ = 125°C 0V≤Feedback ≤ 3V	-15		15	µA
V_{out}	Output voltage range	V_{Supply} = 36V(23)	0.8		30	V
I_{load}	Output load current	V_{Supply} = 36V	0.002		1.5	A
R_{DSonHS}	Internal high/low side R_{DSon}	$T_{junction}$ = 125°C; I_{load}=1A		0.6	0.8	Ω
V_{loop}	Loop voltage accuracy			±3%		
$V_{REG\_UV\_f}$	Under voltage falling threshold	(24)	84.5	87	89.5	%
$V_{REG\_UV\_r}$	Under voltage rising threshold	(24)	90.5	93	95.5	%
$V_{REG\_UV\_hys}$	Under voltage hysteresis			6		%
t_{aux_UV}	Under voltage deglitch filter			5		µs
I_{limit}	Current limit protection		1.6		2.5	A
$t_{deglitch}$	Current limit deglitch time		50			ns
t_{I_lim}	Current limit response time	Normal operating mode (no UV) (11)		480	700	ns
t_{I_limUV}	Current limit response time in UV condition.	UV condition (12)		350	500	ns
t_r	Switching output rise time	V_{Supply} = 36V, R_{LOAD} = 422 Ω(25)	5		30	ns
t_f	Switching output fall time	V_{Supply} = 36V, R_{LOAD} = 10 Ω (23)	10		50	ns
t_{dead}	Crossover dead time			100		ns
F_{REGPWM}	Operating frequency			F_{osc}/64		kHz
Battery charger (Bridge 4)						
V_{AUX3_SW}	Output pin voltage range (DC4x)	(26)	-1		V_{Supply}	V
I_Q	Output leakage current	$T_{junction}$ = 125°C	-100		+100	µA
V_{FBRef}	Battery charger control loop feedback reference voltage	SelFBRef = '00'	1.37	1.412	1.455	V
		SelFBRef = '01' (8)	1.746	1.8	1.854	V
		SelFBRef = '10'	2.079	2.143	2.207	V
		SelFBRef = '11'	2.425	2.5	2.575	V

Table 5. Electrical characteristics (continued)

Parameter	Description	Test condition	Min	Typ	Max	Unit
$V_{CurrRef}$	Battery charger control loop feedback reference current	SelCurrRef = '00' (8)	0.873	0.9	0.927	V
		SelCurrRef = '01'	1.394	1.437	1.48	V
		SelCurrRef = '10'	1.746	1.8	1.854	V
		SelCurrRef = '11'	2.182	2.25	2.318	V
V_{out}	Output voltage range	V_{Supply} = 36V (27)	1.412		30	V
I_{load}	Output load current	V_{Supply} = 36V	0.002		3	A
R_{DSon}	Internal high/low side R_{DSon}	$T_{junction}$ = 125°C; I_{LOAD} = 1.5A		0.3	0.4	Ω
V_{loop}	Loop voltage accuracy			±3%		
$V_{BC\_UV\_f}$	Under voltage falling threshold	(28)	84.5	87	89.5	%
$V_{BC\_UV\_r}$	Under voltage rising threshold	(28)	90.5	93	95.5	%
$V_{BC\_UV\_hys}$	Under voltage hysteresis			6		%
t_{aux_UV}	Under voltage deglitch filter			5		µs
I_{limit}	Current limit protection		3.2		5	A
$t_{deglitch}$	Current limit deglitch time		50			ns
t_{I_lim}	Current limit response time	Normal operating mode (no UV) (11)		480	700	ns
t_{I_limUV}	Current limit response time in UV condition.	UV condition (12)		350	500	ns
t_r	Switching output rise time	V_{Supply} = 36V, R_{LOAD} = 422 Ω (25)	5		30	ns
t_f	Switching output fall time	V_{Supply} = 36V, R_{LOAD} = 10 Ω (25)	10		50	ns
t_{dead}	Crossover dead time			100		ns
F_{BCPWM}	Operating frequency			F_{osc}/64		kHz
ADC with A2DType=0 (29)						
IMR	Measurement range	A2dType = 0	0		V_{3v3}	V
INL	Integral non-linearity	A2dType = 0(30)(31)			±2	LSB
DNL	Differential non-linearity	A2dType = 0(32)(31)			±2	LSB
OE	Offset error	A2dType = 0(33)			±4	LSB
OE_{Drift}	Offset error drift	A2dType = 0 over time and temperature			±3	LSB
GE	Gain error	A2dType = 0(34)			±4	LSB
GE_{Drift}	Gain error drift	A2dType = 0 over time and temperature			±4	LSB
t_{conv}	Minimum conversion time				55	µs
	Resolution	(35)		8		bits

Table 5. Electrical characteristics (continued)

Parameter	Description	Test condition	Min	Typ	Max	Unit
C_{in}	Input sampling capacitance	(36)			4	pF
ADC with A2DType=1 (37)						
IMR	Measurement range	A2dType = 1	0		V_{3v3}	V
INL	Integral non-linearity	A2dType = 1 (30)(31)			±1	LSB
DNL	Differential Non-Linearity	A2dType = 1 (32)(31)			±1	LSB
OE	Offset error	A2dType = 1 (33)			±4	LSB
OE_{Drift}	Offset error drift	A2dType = 1 over time and temperature			±3	LSB
GE	Gain error	A2dType = 1 (34)			±4	LSB
GE_{Drift}	Gain error drift	A2dType = 1 over time and temperature			±4	LSB
t_{conv}	Minimum conversion time				10	µs
	Resolution			9		bits
C_{in}	Input sampling capacitance	(36)			4	pF
Current DAC						
V_R	Pin voltage operative range (GPIO8)	(38)	0.7		5.5	V
I_{OUT_OFF}	Output off leakage current	DacValue[5:0] = 000000	-1		+1	µA
I_{FULL_ERR}	Full scale current error	DacRange[1:0] =xx DacValue[5:0] = 111111	-15		+15	% of $I_{FULL\ typ}$
INL_{10_11}	Integral non-linearity for 10 and 11 ranges				±2	LSB
DNL_{10_11}	Differential non-linearity for 10 and 11 ranges				±2	LSB
INL_{01}	Integral non-linearity for 01 range				±1	LSB
DNL_{01}	Differential non-linearity for 01 range				±1	LSB
$R_{CurrDac\_res}$	Gpio[8] divider total resistance			45		kΩ
$R_{CurrDac\_ratio}$	Gpio[8] divider ratio			3/5		
t_{set}	Settling time	(39)			5	µs
Operational amplifier (40)						
V_{GPIO_SPI}	Operational amplifier supply voltage range		3.15	3.3	3.45	V
V_{ICM}	Input common mode voltage range		0		V_{GPIO_SPI}	V
V_{OUT_MAX}	Output voltage	I_{LOAD} =± 1mA	0.1		3.2	V

Table 5. Electrical characteristics (continued)

Parameter	Description	Test condition	Min	Typ	Max	Unit
VOp1PlusRef VOp2PlusRef	Operational amplifier 1 and 2 reference voltage	OpxRef[1:0]=00 OpxRef[1:0]=01 OpxRef[1:0]=10 OpxRef[1:0]=11	0.97 1.6 1.94 2.425	1 1.65 2 2.5	1.03 1.7 2.06 2.575	V
Avd	Open loop gain	V_{ICM}=1.65V I_{LOAD}= 0mA	90			dB
CMRR	Common mode rejection ratio		80	110		dB
PSRR	Power supply rejection ratio	I_{LOAD}= ±6mA V_{ICM}=1.65V		90		dB
I_{in_offs}	Input offset current		-150		150	nA
I_{in_bias}	Input bias current		-500		500	nA
V_{in_offs}	Input offset voltage		-5		5	mV
GBWP	Gain bandwidth product	C_{load}=100pF V_{ICM}=1.65V R_{load}=330 Ω to V_{GPIO_SPI}	2			MHz
I_{out}	Output current	V_{out}=1.65V			10	mA
I_{short_max}	Short circuit current		12	20		mA
SR	Slew rate	I_{load}= 0 C_{LOAD}=100pF	1.3	1.75		V/µs
Operational amplifier used as comparator (40) (41)						
V_{OUT_MAX}	Output voltage	I_{load} =± 10mA	0.3		2.9	V
t_{OFF}	Turn off propagation delay	V_{CM} = 1.65V Δ Vi = -/+ 20mV C_{LOAD}=100pF (42)(43)		0.6	1	µs
t_{FALL}	Fall time	V_{CM} = 1.65V Δ Vi = -/+ 20mV C_{LOAD}=100pF (42)(43)		0.15	0.4	µs
t_{ON}	Turn on propagation delay	V_{CM} = 1.65V Δ Vi = -/+ 20mV C_{LOAD}=100pF (42)(43)		0.25	0.5	µs
t_{RISE}	Rise time	V_{CM} = 1.65V Δ Vi = -/+ 20mV C_{LOAD}=100pF (42)(43)		0.2	0.4	µs
Low power switch						
V_{PSW}	Input voltage range		2.4		3.6	V
V_{OUT_MAX}	Output voltage				V_{GPIO_SPI}	V
R_{DSon}	Switch R_{DSon} resistance	I_{load}=100mA		0.6	1	Ω
I_{LIMIT}	Current limit		150	250	350	mA
$t_{deglitch}$	Current limit deglitch time		50			ns

Table 5. Electrical characteristics (continued)

Parameter	Description	Test condition	Min	Typ	Max	Unit
t_{I_lim}	Current limit response time				650	ns
C_{LOAD}	Max load capacitance				2.5	µF
t_{ON}	Turn on propagation delay	V_{GPIO_SPI}=3.3V I_{LOAD}=1mA C_{LOAD}=100pF(44)		450	650	ns
t_{OFF}	Turn off propagation delay	V_{GPIO_SPI}=3.3V I_{LOAD}=1mA C_{LOAD}=100pF(44)		250	450	ns
Interrupt controller						
t_{PULSE}	Pulse duration			16*T_{osc}		µs
$t_{INTFILT}$	Filter time			200		ns
GPIO[0], GPIO[1], GPIO[2], GPIO[3], GPIO[4], GPIO[6]						
V_{IH}	High level input voltage		1.6			V
V_{IL}	Low level input voltage				0.8	V
V_{HYS}	Input voltage hysteresis		0.15	0.22		V
V_{OL}	Low level output voltage	I_{OUT} = 15mA			0.5	V
$I_{LEAKAGE}$	Leakage current	$0 \leq V_{out} \leq V_{3v3}$	-1		1	µA
t_{DELAY}	Delay from serial write to pin Low	C_{LOAD} =50 pF(45)			500	ns
GPIO[5], GPIO[7], GPIO[9], GPIO[10], GPIO[11], GPIO[12], GPIO[13], GPIO[14]						
V_{IH}	High level input voltage		1.6			V
V_{IL}	Low level input voltage				0.8	V
V_{HYS}	Input voltage hysteresis		0.15	0.22		V
V_{OL}	Low level output voltage	I_{OUT} = 15mA			0.5	V
V_{OH}	High level output voltage	I_{OUT} = 5mA	2.75			V
$I_{LEAKAGE}$	Leakage current	$0 \leq V_{out} \leq V_{3v3}$	-1		1	µA
t_{DELAY}	Delay from serial write to pin low	C_{LOAD} =50 pF(45)			500	ns
GPIO[8]						
V_{IH}	High level input voltage		1.6			V
V_{IL}	Low level input voltage				0.8	V
V_{HYS}	Input voltage hysteresis		0.13	0.22		V
V_{OL}	Low level output voltage	I_{OUT} = 15mA,			0.4	V
I_{LEAK_0}	Leakage current	EnGpio8DigIn=0, $0 \leq$ Vout $\leq$ 5V	-1		1	µA
I_{LEAK_1}	Leakage current	EnGpio8DigIn=1, $0 \leq$ Vout $\leq$ 5V	-1		5	µA

Table 5. Electrical characteristics (continued)

Parameter	Description	Test condition	Min	Typ	Max	Unit
I_{AD}	A/D path absorbed current	ADChannelX[4:0] =10001 and bit EnDacScale=0	-1		1	µA
t_{DELAY}	Delay from serial write to pin low	C_{LOAD} =50 pF(45)			500	ns
SPI interface (40)						
V_{IH}	High level input voltage	(46)	1.6			V
V_{IL}	Low level input voltage	(46)			0.8	V
V_{HYS}	Input voltage hysteresis	(46)	0.15	0.22		V
V_{OH}	High level output voltage	I_{OUT} = -10mA,(47)	2.75			V
V_{OL}	Low level output voltage	I_{OUT} = 10mA,(47)			0.4	V
t_{SCLK}	SCLK period		62.5			ns
t_{SCLK_rise}	SCLK rise time				2	ns
t_{SCLK_fall}	SCLK fall time				2	ns
t_{SCLK_high}	SCLK high time		20			ns
t_{SCLK_low}	SCLK low time		20			ns
t_{nSS_setup}	nSS setup time		10			ns
t_{nSS_hold}	nSS hold time		10			ns
t_{nSS_min}	nSS high minimum time		30			ns
t_{MOSI_setup}	MOSI setup time		10			ns
t_{MOSI_hold}	MOSI hold time		10			ns
t_{MISO_rise}	MISO rise time	C_{LOAD}=50pF(48)			9	ns
t_{MISO_fall}	MISO fall time	C_{LOAD}=50pF (48)			9	ns
t_{MISO_valid}	MISO valid from clock low		0		15	ns
$t_{MISO\_disable}$	MISO disable time		0		15	ns
C_{LOAD}	MOSI maximum load				200	pF

1. This value is useful to define the voltage rating for external capacitor to be connected from V_{Supply} to $V_{SupplyInt}$.
2. This typical value is only intended to give an estimation of the current consumption when L6460 is configured in simple regulators mode (see following *Chapter 8.6.4*) at the end of the start up sequence and with no load on regulators. This typical value allows a raw choose of the external resistor but the definitive choose must be done according to the recommendations on *Chapter 4.1*).
3. Measured between 10% and 90% of output voltage transition.
4. Measured from a fault detection to 50% of output voltage transition.
5. Current is defined to be positive when flowing into the pin.
6. Load regulation is calculated at a fixed junction temperature using short load pulses covering all the load current range. This is to avoid change on output voltage due to heating effect.
7. Undervoltage rising and falling thresholds are intended as a percentage of feedback pin voltage ($V_{LINmain\_FB}$).
8. Default state.
9. The regulated voltage can be calculated using the formula: $V_{SWmain\_OUT} = V_{FBREF} *(R_a+R_b)/R_b$.

10. Undervoltage rising and falling thresholds are intended as a percentage of feedback pin voltage ($V_{SW\_main\_FB}$).
11. This condition is intended to simulate an extra current on output.
12. This condition is intended to simulate a short circuit on output.
13. Rise and fall time are measured between 10% and 90% V_{SWmain} output voltage.
14. Undervoltage rising and falling thresholds are intended as a percentage of feedback pin voltage (V_{SWDRV_FB}).
15. The current protection values must be intended as a protection for the chip and not as a continuous current limitation. The protection is performed by switching off the output bridge when current reaches values higher than the I_{OC} max. No protection could be guaranteed for values in the middle range between I_{MAX} and I_{OC}
16. In this cell X stands for 1 or 2, Y stands for A or B
17. In this cell X stands for 3 or 4, Y stands for A or B
18. The current protection thresholds for Bridge 3 and 4 are not selectable so only the max current value (MtrXSideYILimSel[1:0]= 11) is available.
19. Overcurrent Off time can be configured using SPI.
20. Rise and fall time are measured between 10% and 90% of DC output voltage. With device in full bridge configuration (resistive load between outputs).
21. Default state for Aux1
22. Default state for Aux2
23. The regulated voltage can be calculated using the formula: $V_{AUX\_SW} = V_{FBREF} *(R_a+R_b)/R_b$.
24. Undervoltage rising and falling thresholds are intended as a percentage of feedback pin voltage (GPIO1 and/or GPIO2)
25. Rise and fall time is measured between 10% and 90% of output voltage.
26. The external components connected to the pin must be chosen to avoid that the voltage exceeds this operative range.
27. The regulated voltage can be calculated using the formula: $V_{AUX3\_SW} = V_{FBREF} *(R_a+R_b)/R_b$.
28. Undervoltage rising and falling thresholds are intended as a percentage of feedback pin voltage (V_{REF_FB}).
29. The definition of LSB for this table is LSB=IMRmax/($2^{7.5}$-1).
30. Integral Non Linearity error (INL) is defined as the maximum distance between any point of the ADC characteristic and the “best straight line” approximating the ADC transfer curve.
31. The ADC ensures monotonic characteristic and no missing codes.
32. Differential nonlinearity error (DNL) is defined as the difference between an actual step width and the ideal width value of 1 LSB.
33. Offset error (OE) is the deviation of the first code transition (000...000 to 000...001) from the ideal (i.e. GND + 0.5 LSB).
34. Gain error (GE) is the deviation of the last code transition (111...110 to 111...111) from the ideal (V3v3 - 0.5 LSB), after adjusting for offset error.
35. Please note that the result of the conversion will always be a 9-bit word: to speed up the conversion, the resolution is reduced when the ADC is used in the 8- bit resolution mode.
36. Actual input capacitance depends on the pin that must be converted.
37. The definition of LSB for this table is LSB=IMRmax/(2^9-1).
38. All parameters are guaranteed in the range between V_{OL} and $V_{R\ Max}$.
39. Measured from DacValue[5:0] change in SPI interface.
40. V_{GPIO_SPI} = 3.3 V unless otherwise specified
41. In this section reports the operational amplifier parameters that change when used as comparator.
42. ΔVi is the differential voltage applied to input pins across the common voltage V_{CM}.
43. Measured between 50% of input and output signal.
44. Time measured from change in SPI interface to 50% of external pin transition.
45. Measured between nSS rising edge and 50% of V_{out}.
46. Specification applies to nSS, SCLK and MOSI pins.
47. Current is considered to be positive when flowing towards the IC
48. These times are measured at the pin output between specified V_{OH} and V_{OL}.

4 Internal supplies

L6460 includes three internal regulators used to provide a regulated voltage to internal circuits.

The internal regulators are the following:

- $V_{SupplyInt}$ regulator.
- Charge pump regulator.
- V_{3v3} regulator.

4.1 $V_{SupplyInt}$ regulator

$V_{SupplyInt}$ is the output of an internal regulator used to supply some internal circuits. This regulator is not intended to provide external current so it must not be used to supply external loads. An external capacitor must always be connected to this pin (preferably towards V_{Supply} pin), recommended value is in the range 80 ÷ 120 nF.

Figure 3. $V_{SupplyInt}$ pin

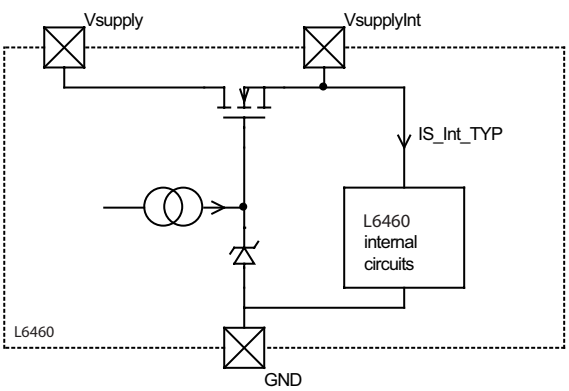

The $V_{SupplyInt}$ pin may also be externally connected to V_{Supply} pin by means of an external resistor R_{EXT}: this allows R_{EXT}, particularly when V_{Supply} is at the max values of the operative supply range, to dissipate power that otherwise would be dissipated inside the chip. The choice of the optimal resistor depends on the application since it is strictly depending on both V_{Supply} and the current used inside the chip (that is changing with the chosen configuration).

R_{EXT} could be chosen by applying this formula: $R_{EXT} = (V_{Supply}\ min - V_{S\_Int}\ max)/(I_{S\_Int}\ max)$.

I_{S_Int} max is depending from the chosen configuration and represents the total current needed by the circuits connected to this pin.

For example, with V_{Supply} = 32 V and I_{S_Int} = 12 mA a typical resistor value is 1 kΩ.

4.2 Charge pump regulator

L6460 implements a charge pump regulator to generate a voltage over V_{Supply}.This voltage is used to drive internal circuits and the external FET driver and cannot be used for any other purpose.

This circuit is always under the supervisory circuit control, so no regulator can start before the V_{Pump} voltage reaches its undervoltage rising threshold. If V_{Pump} voltage falls down below its under voltage falling threshold, all the regulators will be switched off.

The charge pump circuit is disabled when L6460 is in “low power mode”.

Figure 4. Charge pump block diagram

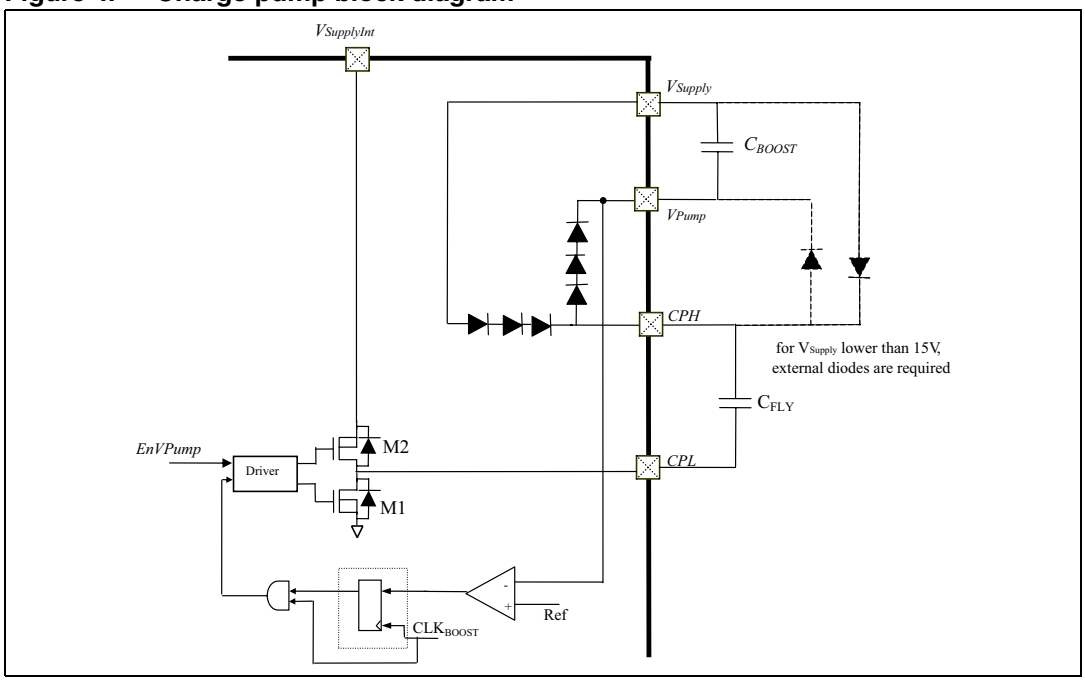

An example of capacitors value is: C_{FLY} = 100 nF and C_{BOOST} = 1 µF

4.3 V3v3 regulator

V3v3 is the output of an internal regulator used to supply some low voltage internal circuits. This regulator is not intended to provide external current so it must not be used to supply external loads. An external capacitor must always be connected from this pin to GND, recommended value is in the range 80 ÷ 120 nF.

5 Supervisory system

The supervisory circuitry monitors the state of several functions inside L6460 and resets the device (and other ICs if connected to nRESET pin) when the monitored functions are outside their normal range. Supervisory circuitry can be divided into three main blocks:

- Power on reset (POR) generation circuitry.
- nRESET (nRST_int) generation circuitry.
- Thermal shut down (TSD) generation circuitry.

POR circuitry monitors the voltages that L6460 needs to guarantee its own functionality; nRESET circuitry controls if L6460's main voltages are inside the normal range; TSD is the thermal shut down of the chip in case of overheating.

5.1 Power on reset (POR) circuit

Power on reset circuit monitors V_{Supply}, and V_{3V3} voltages. The purpose of this circuit is to set the device is in a stable and controlled status until the minimum supply voltages that guarantee the device functionality are reached. The output signal of this circuit (in the following indicated as "POR") becomes active when V_{Supply} or V_{3V3} go under their falling threshold.

When POR output signal is active, all functions and all flags inside L6460 are set in their reset state; once POR signal comes back from off state (meaning monitored voltages are above their rising threshold), the power up sequence is re-initialized.

5.2 nRESET generation circuit

The nRESET circuit monitors V_{Supply}, $V_{SupplyInt}$, V_{Pump}, V_{GPIO_SPI} and all system regulators (V_{System}) voltages. The purpose of this circuit is to prevent the device functionality until the monitored voltages reach their operative value (please note that V_{3v3} is monitored by POR, so it must be above its minimum value, otherwise nRESET circuit is not active).

This circuit generates an internal reset signal (in the following indicated as "nRST_int") that will also be signaled to external circuits by pulling low the nRESET pin.

The signal nRST_int becomes active in the following cases:

1. When one of the following voltages is lower than its own under voltage threshold:
   - V_{Supply} and $V_{SupplyInt}$.
   - V_{Pump}.
   - V_{System} (all switching or linear system regulators voltages).
   - V_{GPIO_SPI}.
2. When watchdog timer counter (see *Chapter 6*) elapse the watchdog timeout time (only if watchdog function is enabled).
3. When L6460 is in "Low Power mode".
4. When EnExtSoftRst bit in SoftResReg register is at logic level = "1" and a "SoftRes" command is applied (see SoftResReg register description in *Chapter 25*).

When an nRST_int event is caused by above cases, the nRESET pin will stay low for a "stretch" time that starts from the moment that nRST_int signal returns in the operative

state. This stretch time can be selected by setting the ID[1:0] bits in the SampleID register according to following table.

Table 6. Stretch time selection

ID[1]	ID[0]	Selected stretch time	Note
		Typ	
0	0	16ms	Default state
0	1	32ms	
1	0	48ms	
1	1	64ms	

When nRST_int becomes active (logic level = “0”) it sets in their reset state some of the functions inside L6460. The main functions that will be reset by nRST_int signal are the following:

- Serial interface will be reset and will not accept any other command.
- The bridges 1 and 2 will place their outputs in high impedance and PWM and direction signals will be reset.
- AD converter will be powered off.
- GPIOs will be powered off.
- Current DAC will be powered off.
- Operational amplifiers will be powered off.
- Watchdog count will be reset (while Watchdog flags won’t be reset).
- Interrupt controller will be powered off.
- Digital comparator will be powered off.

Additionally the system regulators will be powered off but only if the voltage that caused the nRST_int event is checked before the system regulator in the power up sequence. This means that:

- all system regulators will be powered off if nRST_int is caused by V_{Supply}, $V_{SupplyInt}$, V_{Pump} (and also if V3v3 causes a POR);
- no one of the system regulators will be powered off if nRST_int is caused by V_{GPIO_SPI};
- only the system regulators that follows the system regulator that caused the nRST_int in power up sequence will be powered off.

Figure 5. nReset generation circuit

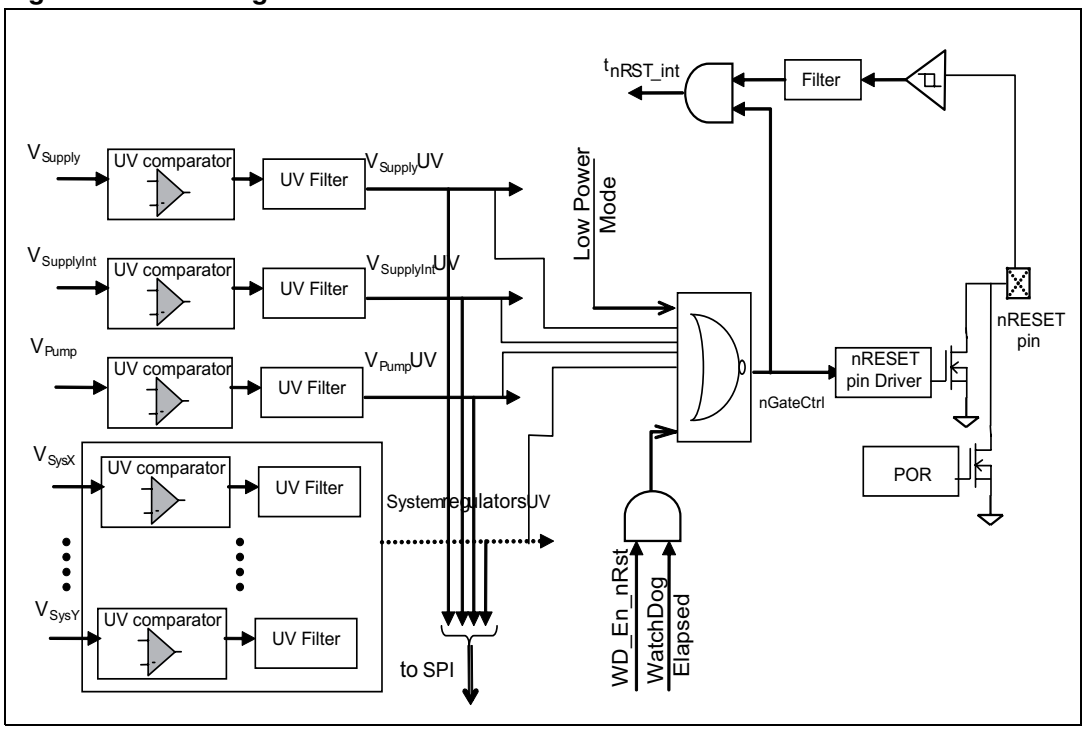

Note: All regulator voltages included in power up sequence (V_{SysX} – V_{SysY} in Figure 5) will be considered as nRESET circuit voltages.

5.3 Thermal shut down generation circuit

The third component of the supervisory circuit is the thermal shut down generation circuit.

This circuit generates two different flags depending on the IC temperature:

- the “TSD” flag indicates that the IC temperature is greater than the maximum allowable temperature.
- the “Warm” flag, that can be read using serial interface, becomes active at a lower temperature respect to TSD signal, therefore it can be used to prevent the IC from reaching over temperature.

When a TSD event occurs, L6460 will enter in the reset state placing the bridges in high impedance and turning off all regulators and other circuits until the internal temperature decreases below the Warm temperature. At this point, L6460 will restart the power up sequence and TSD bit will be set and will be readable as soon as L6460 will come out from the reset state.

This TSD bit can be reset in three ways:

- by writing a logic level ‘1’ in the ClearTSD bit in the ICTemp register (see *Chapter 24*);
- by a POR event;
- by entering in “Low Power Mode”.

The Warm bit, set by L6460 when IC is working over the warming temperature, can be read using the SPI interface. Once this bit is set it can be reset in three ways:

- by writing a logic level ‘1’ in the ClearWarm bit;
- by a POR event;
- by entering in “Low Power Mode”.

The thermal sensor voltage can be converted using the internal A/D: this way the microcontroller can directly measure the IC temperature.

To avoid unwanted commutation especially when temperature is near the thresholds, the output signal is filtered for both TSD and Warm.

6 Watchdog circuit

The Watchdog timer can be used to reset L6460 if it is not serviced by the firmware that can periodically write at logic level “1’ the ClrWDog bit in the WatchDogStatus register.

This circuit is disabled by default; firmware can enable it by setting at logic level ‘1’ the WDEnable bit in the WatchDogCfg register.

When the Watchdog timeout event happens, L6460 sets to ‘1’ a latched bit WDTimeOut in theWatchDogStatus register that can be read using SPI interface; once this bit is set it can be cleared in three ways:

- by writing a ‘1’ in the WDClear bit in the WatchDogStatus register.
- by writing a ‘1’ in the SoftReset bit in the WatchDogStatus register.
- by a POR event.

The Watchdog function includes also a warning bit WDWarning to indicate, via serial interface or via the circuit called Interrupt Controller (see *Chapter 21*) that the watchdog is near to its timeout; this bit is asserted to logic level “1” exactly one watch dog clock period (WD_Tclk) before the watchdog timeout happens. Firmware can enable the WDTimeOut signal to cause an “nRst_int” event by setting to logic ‘1’ the WDEnnRst bit.

Figure 6. Watchdog circuit block diagram

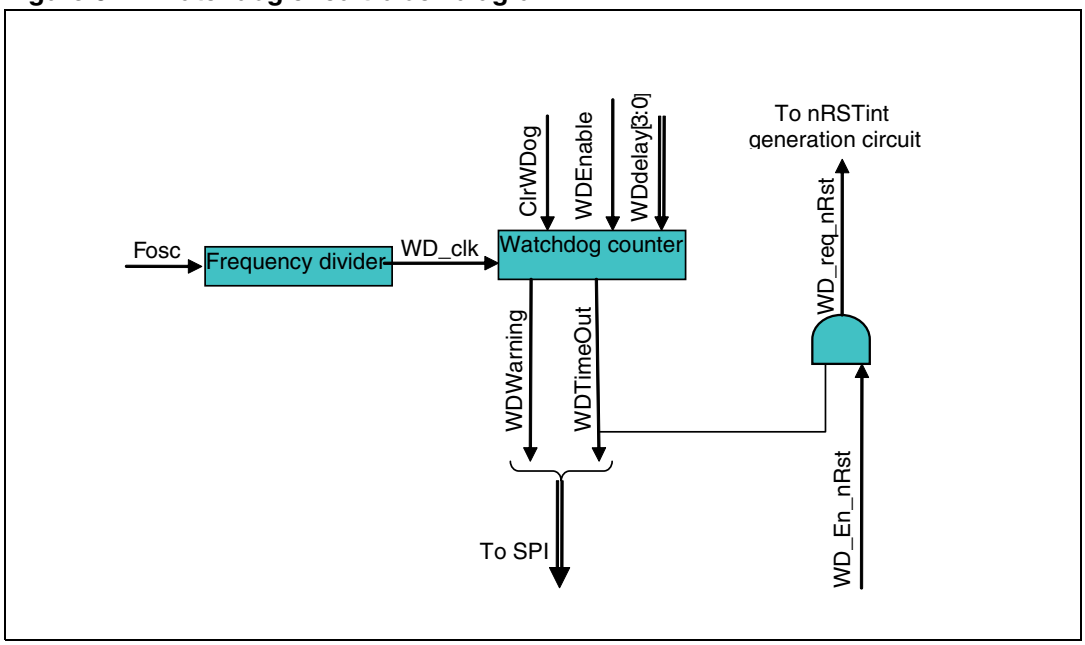

The watchdog timeout has an imprecision of maximum one WD_Tclk. The effective programmed WD time is changed in the register only when the watchdog circuit is serviced by firmware with ClrWDog bit. At this time the watchdog timer is reset and the new value of the WD delay value is loaded.

The watchdog timer can be programmed to generate different timeouts using the WDdelay[3:0] bits in the WatchDogCfg register according to following table.

Table 7. Watchdog timeout specifications

WDdelay[3:0]	WD timeout
	Typ
0000	8*WD_Tclk
0001	9*WD_Tclk
0010	10*WD_Tclk
0011	11*WD_Tclk
0100	12*WD_Tclk
0101	13*WD_Tclk
0110	14*WD_Tclk
0111	15*WD_Tclk
1000	16*WD_Tclk
1001	17*WD_Tclk
1010	18*WD_Tclk
1011	19*WD_Tclk
1100	20*WD_Tclk
1101	21*WD_Tclk
1110	22*WD_Tclk
1111	23*WD_Tclk

7 Internal clock oscillator

L6460 includes a free running oscillator that does not require any external components.

This circuit is used to generate the time base needed to generate the internal timings; the typical frequency is 16 MHz.

The oscillator circuit starts as soon as the IC exits from the power on reset condition and it is stopped only when in “low power mode”.

8 Start-up configurations

L6460 start-up configuration is selected by setting in different states the GPIO[0], GPIO[3] and GPIO[4] pins. Each of these is a three state input pin and is able to distinguish among the following situations:

Table 8. Possible start-up pins state symbol

Pin condition	State symbol
Shorted to ground	0
Shorted to V_{3v3} pin	1
Floating	Z

Note: "Shorted" means: R≤1KOhm; "Z" means: R≥10KOhm, C≤200pF

8.1 Operation modes

When V_{Supply} voltage is applied to L6460, the internal regulator V3v3, used to supply the logic circuits inside the device, starts its functionality. When it reaches its final value, L6460 enables the GPIO[0] pin state read circuitry, and, after a time TpinSample, it will sample the GPIO[0] state. If it is found to be in high impedance, L6460 does not consider GPIO[3] and GPIO[4] pins state and starts its "Basic device" mode sequence. If GPIO[0] is found to be connected to ground or to V3v3, L6460 checks the state of GPIO[3] and GPIO[4] pins to select its start-up configuration.

The possible configurations can be classified in four "Major" modes:

1. Basic device.
2. Slave device.
3. Master device.
4. Single device.

Hereafter is reported the correspondence table between GPIO[X] state and L6460 configurations.

Table 9. Start-up correspondence

Pin state[1]			Major mode	Minor mode[2]
GPIO[0]	GPIO[3]	GPIO[4]		
Z	X	X	Basic	
0	0	0	Single	Bridge
0	0	Z		Primary regulator
0	0	1		Regulators
0	Z	0		Simple regulator
0	Z	Z		Bridge + VEXT [3]
0	Z	1		Secondary regulators
0	1	0	Master	Bridge
0	1	Z		Primary regulator
0	1	1		Regulators
1	0	0		Simple regulator
1	0	Z		Bridge + VEXT [3]
1	0	1		Secondary regulators
1	Z	0	Slave	Bridge
1	Z	Z		Primary regulator
1	Z	1		Regulators
1	1	0		Simple regulator
1	1	Z		Bridge + VEXT [3]
1	1	1		Secondary regulators.

1. “X” means “don’t care”.
2. The description of these modes is in the following *Chapter 8.6*
3. VEXT is the regulator output voltage obtained using the switching regulator controller with external FET.

8.2 Basic device mode

The basic device mode is selected by leaving the GPIO[0] pin floating. In this mode L6460 doesn’t use GPIO[3] and GPIO[4] as configuration pins, leaving them free for other uses.

When in this mode the regulators included in the start up sequence (except V_{SWmain}) are considered as system regulators and they start in the following sequence:

1. Auxiliary switching regulator1 (V_{AUX1_SW}).
2. Auxiliary switching regulator2 (V_{AUX2_SW}).
3. Main linear regulator (V_{SWmain}).
4. Main switching regulator (V_{SWmain}) (Not system regulator).

8.3 Slave device mode

In slave device mode, L6460 consider the nAWAKE pin as an input enable. Since this is now a digital pin, the current pull up source inside the nAWAKE circuit is disabled.

At the startup, if the nAWAKE pin is found to be low for a period higher than $t_{AWAKEFILT}$, L6460 enters directly in the “Low Power mode”; when nAWAKE pin is pulled high for a period higher than $t_{AWAKEFILT}$, L6460 begins its start up procedure.

8.4 Master device mode

In master device mode, L6460 begins its start up procedure without waiting for any external enable signal and it uses GPIO[5] pin to drive the nAWAKE pin of Slave devices.

During the whole start up time, it forces its GPIO[5] pin at logic level “0” in order to maintain all slave devices in “Low Power mode” as previously described. When start up operations are completed, L6460 forces the GPIO[5] output to logic level “1” to enable the slave devices and keeps GPIO[5] output at high level until it senses an under-voltage on any of its System regulators. If firmware writes in the PwrCtrl register to set Master L6460 in “Low Power mode” it immediately forces GPIO[5] output to logic level “0” to force the slave devices to enter in “Low Power mode”, then it waits for $T_{MASTWAIT}$ time and it starts its “Low Power mode” sequence.

8.5 Single device mode

In single device mode, the device behaves similarly to master device mode but:

1. It doesn’t use the GPIO[5] pin to drive slave devices.
2. It doesn’t wait for $T_{MASTWAIT}$ before entering in “Low Power mode”.

8.6 Sub-configurations for slave, master or single device modes

Each slave, master or single device modes can be divided in other minor modes depending on the start-up sequence needed for L6460 internal regulators.

Unless otherwise specified, in all the following modes the regulators included in the start up sequence are considered system regulators and they start in the sequence indicated.

8.6.1 Bridge mode

In this configuration bridges 3 and 4 are not used as regulators and therefore can be configured by the firmware in any of their possible bridge modes.

When in this mode the power-up sequence is:

1. Main switching regulator (V_{SWmain}).
2. Main linear regulator ($V_{LINmain}$).

8.6.2 Primary regulator mode (KP)

In this configuration bridge 4 can be configured by firmware while bridge 3 is configured as two separate synchronous switching regulators. The last regulator in the sequence (V_{AUX2_SW}) is not considered a system regulator.

When in this mode the power-up sequence is:

1. Auxiliary switching regulator1 (V_{AUX1_SW}).
2. Main switching regulator (V_{SWmain}) together with main linear regulator ($V_{LINmain}$).
3. Auxiliary switching regulator2 (V_{AUX2_SW}) (Not system regulator).

8.6.3 Regulators mode

In this configuration bridge 4 can be configured by firmware while bridge 3 is configured as two separate synchronous switching regulators, but the start up sequence is different previous one.

When in this mode the power-up sequence is:

1. Main switching regulator (V_{SWmain}).
2. Auxiliary switching regulator1 (V_{AUX1_SW})
3. Auxiliary switching regulator2 (V_{AUX2_SW})

8.6.4 Simple regulator mode (KT)

Also in this configuration bridge 4 can be configured by firmware while bridge 3 is configured as two separate synchronous switching regulators. The last regulator in the sequence (V_{SWmain}) is not considered a system regulator.

When in this mode the power-up sequence is:

1. Auxiliary switching regulator1 (V_{AUX1_SW}).
2. Auxiliary switching regulator2 (V_{AUX2_SW})
3. Main linear regulator ($V_{LINmain}$)
4. Main switching regulator (V_{SWmain}) (not system regulator).

8.6.5 Bridge + V_{EXT} mode

In this configuration bridges 3 and 4 are not used as regulators and the regulator obtained using the switching regulator controller (V_{SWDRV}) is included in start-up.

When in this mode the power-up sequence is:

1. Main switching regulator (V_{SWmain}).
2. Switching regulator controller regulator (V_{SWDRV}).
3. Main linear regulator ($V_{LINmain}$).

8.6.6 Secondary regulators mode

In this configuration, bridge 3 is configured as a single synchronous switching regulator using its two half bridges in parallel ($V_{AUX\_(1//2)SW}$).

When in this mode the power-up sequence is:

1. Main switching regulator (V_{SWmain}).
2. Auxiliary switching regulator ($V_{AUX(1//2)\_SW}$).
3. Main linear regulator ($V_{LINmain}$).

9 Power sequencing

As soon as V_{Supply} and $V_{SupplyInt}$ are above their power on reset level, L6460 will start the charge pump circuit; once V_{Pump} voltage reaches its under voltage rising threshold, L6460 begins a sequence that starts the regulators considered system regulators.

A regulator is considered a System regulator if:

- It has to start in on state without any user action.
- It is included in the power-up sequence.
- Its under-voltage event is considered by L6460 as an error condition to be signaled through nRESET pin.

Once V_{Supply} and $V_{SupplyInt}$, V_{Pump} and all the system regulators are over their under voltage rising threshold, L6460 enters in the normal operating state, that will release nRESET pin and will wait for SPI commands.

L6460 will reduce the noise introduced in the system by switching out of phase all its power circuits (switching regulators, bridges and charge pump).

The L6460's startup sequence of operation is the following:

- start V_{3v3} internal linear regulator
- sample startup configuration
- wait enable if slave device
- start charge pump
- start system regulators (see order in *Section 8.6*)
- if master send enable to slave device
- wait until V_{GPIO_SPI} becomes ok

10 Power saving modes

Saving power is very important for today platforms: L6460 implements different functions to achieve different levels of power saving. Sections here below describe these different power saving modes.

10.1 Standby mode

Almost all low voltage circuitry inside L6460 are powered by V_{3v3} internal regulator; this regulator is a linear regulator powered by $V_{SupplyInt.}$ This means that all the current provided by V_{3v3} regulator is directly coming from $V_{SupplyInt}$ and therefore the total power consumption is:

$$\text{Low voltage power} = V_{Supply} * I_{V3v3}.$$

because $V_{SupplyInt}$ is feeded by V_{Supply}, directly or with a resistor in series.

This power could be reduced by using a switching buck regulator to supply V_{3v3}: in this case, assuming the buck regulator efficiency near to 100%, the dissipated power would become:

$$\text{Low voltage power} \approx 3.3V * I_{V3v3}.$$

To achieve this result there is the need to switch off the internal V_{3v3} linear regulator and to use an additional pin to provide a 3.3 V supply to internal circuits. L6460 can do this by using the low voltage switch implemented on GPIO6 pin. This switch internally connects V_{GPIO_SPI} voltage to GPIO6 output so, by externally connecting GPIO6 to V_{3v3} pin, the V_{GPIO_SPI} voltage can be provided to low voltage circuitry inside L6460.

Figure 7. Standby mode function description

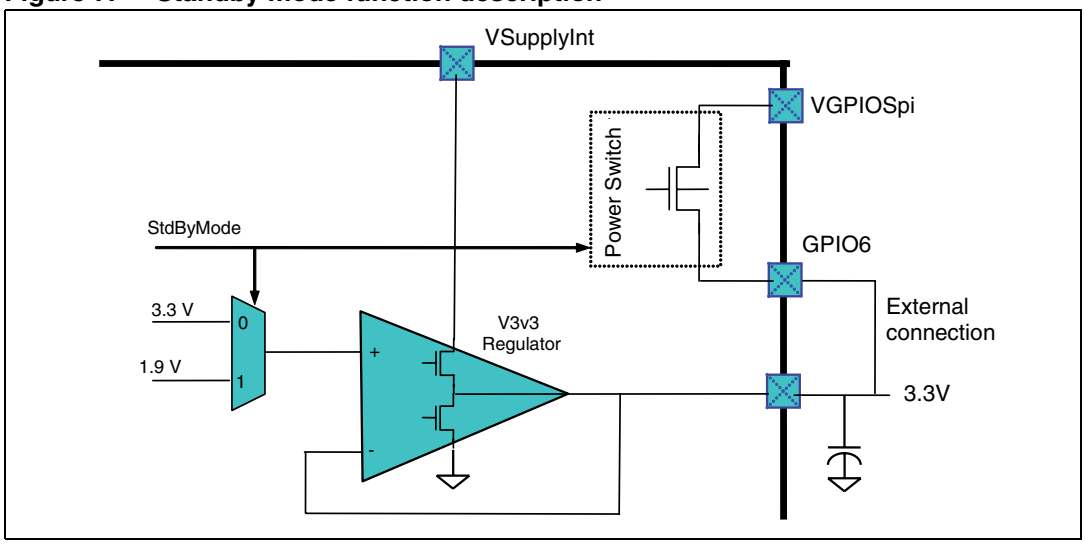

The StdByMode bit used to switch off V_{3v3} and switch on the power switch can be set to '1' by writing the standby command in the StdByMode register. L6460 exits standby mode if a reset event happens or "Low Power mode" is selected.

Because all internal low voltage circuitry powered by V_{3v3} are designed to work with a 3.3V voltage rail, when the standby mode is used, V_{GPIO_SPI} is requested to be at 3.3V.

10.2 Hibernate mode

L6460's hibernate mode allows the firmware to switch off some (or all) selected System Regulators leaving in on state only those necessary to resume L6460 to operative condition when waked-up by an external signal.

Hibernate mode is selected when the firmware writes the command word in the HibernateCmd register. When in hibernate mode L6460 will force regulators in the state (on/off) selected by the firmware by writing in the HibernateCmd register and will force nRESET pin low.

The exiting from hibernate mode is achieved by forcing at low level nAWAKE pin (or GPIO5 pin if L6460 is in Slave mode); L6460 will also exit from hibernate mode if an undervoltage event happens on V_{Supply}, $V_{SupplyInt}$, V_{Pump} or V_{3v3}.

When the exit from hibernate mode is due to an external command, L6460 sets to '1' the bit HibModeLth in the HibernateStatus register.

10.3 Low power mode

When in normal operating mode, the microcontroller can place L6460 in "Low Power mode".

In this condition L6460 sets all bridges outputs in high impedance, powers down all regulators (including system regulators and charge pump) and disables almost all its circuits including internal clock reducing as much as possible power consumption.

The only circuits that remain active are:

- V_{3V3} internal regulator.
- nAWAKE pin current pull-up.
- nRESET pin that will be pulled low.
- POR circuit.

The entering in low power mode is obtained in different ways depending if L6460 is configured as slave device or not. When L6460 is configured as slave device the low power mode is directly controlled by nAWAKE pin that acts as an enable: if this pin is low for a time longer then $t_{AWAKEFILT}$, Low Power mode is entered; if this pin is high L6460 exits from Low Power mode.

In all other start-up configurations, Low Power mode is entered by writing a Low Power mode command in the PowerModeControl register; once L6460 is in Low Power mode it starts checking the nAWAKE pin status: if it is found low for a time longer than $t_{AWAKEFILT}$, L6460 exits from Low Power mode and restarts its startup sequence. When the nAWAKE pin is externally pulled low, the "AWAKE" event is stored and it is readable through SPI. L6460 will also exit from Low Power mode if a POR event is found.

Note: When in "Low power mode" V_{Supply} is monitored only for its power on reset level.

10.4 nAWAKE pin

At the start up, before L6460 has identified the required operation mode (see *Chapter 8*), a current sink I_{INP} is always active to pull down nAWAKE pin. As soon as the operation mode (basic, slave, master or single device) is detected, the functionality of nAWAKE pin will be different.

If L6460 is not configured as slave device a current source I_{OUT} will be active on this pin, while the current sink I_{INP} will be disabled. If L6460 is configured as a Slave device, the current sink I_{INP} will be active until nAWAKE pin is detected high for the first time; after that both current sources I_{INP} and I_{OUT} will be disabled and the nAWAKE pin can be considered as a digital input.

Here below is reported the nAWAKE pin simplified schematic.

Figure 8. nAWAKE function block diagram

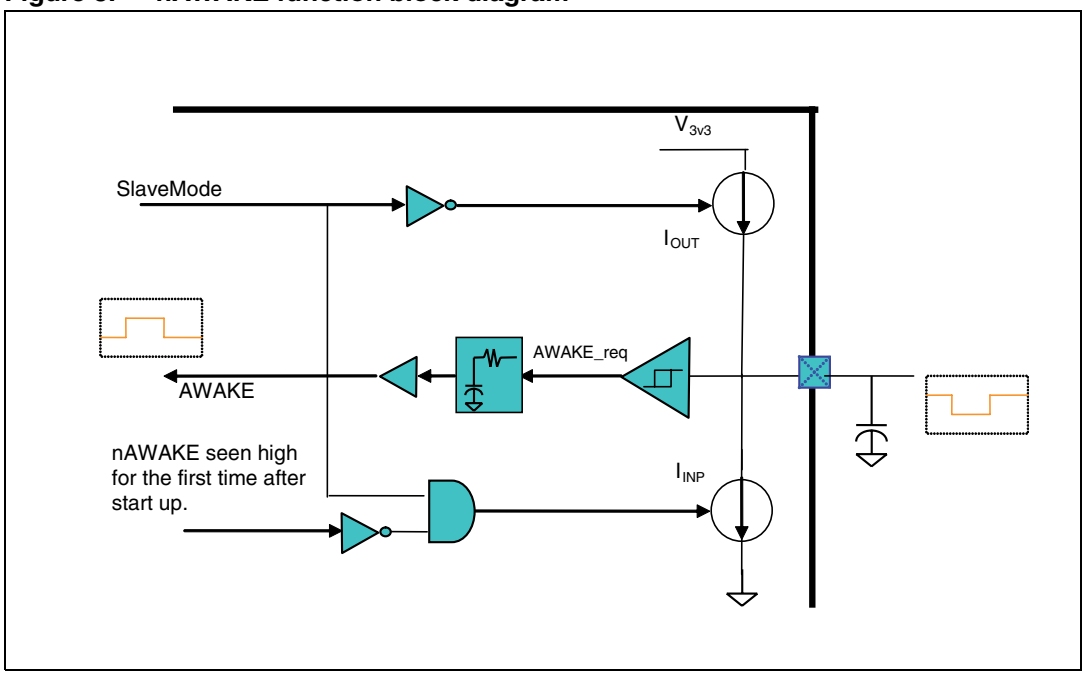

11 Linear main regulator

The linear main regulator is directly powered by V_{Supply} voltage and it is one of the regulators that L6460 could consider as a system regulator. This means that the voltage generated by this regulator is not used to power any internal circuit, but L6460 will check that the feedback voltage $V_{LINmain\_FB}$ is in the good value range before enabling all its internal functions. When an under-voltage event (with a duration longer than period t_{prim_uv} defined by the deglitch filter) is detected during normal operation, L6460 will enter in reset state and it will signal this event to the microcontroller by pulling low the nRESET pin and disabling most of its internal blocks.

Here are summarized the primary features of the regulator:

- Regulated output voltage from 0.8V to V_{Supply}-2V with a maximum load of 10mA.
- Band gap generated internal reference voltage.
- Short circuit protected (output current is clamped to 22mA typ).
- Under voltage signal (both continuous and latched) accessible through serial interface.
- Low power dissipation mode.

The internal series element is a P-channel MOS device. The voltage regulator will regulate its output so that feedback pin equals $V_{LINmain\_FB}$, therefore the regulated voltage can be calculated using the formula:

$$V_{LINmain\_OUT} = V_{LINmain\_ref} *(R_a+R_b)/R_b$$

Figure 9. Linear main regulator

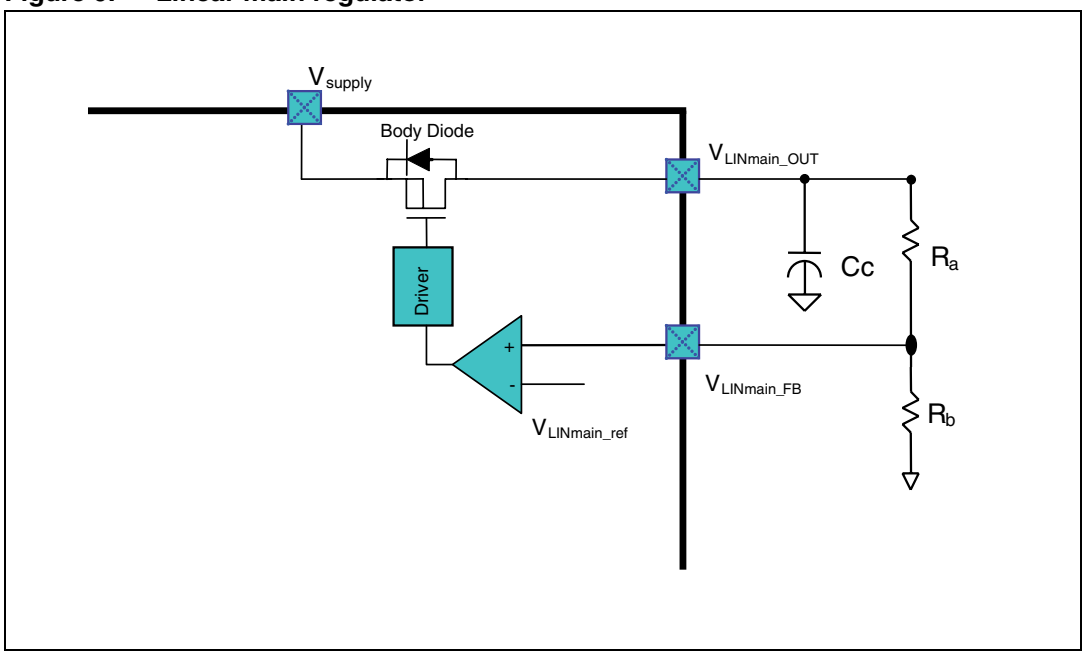

To extend the output current capability this regulator can be used as a controller for an external active component able to provide higher current (i.e. a Darlington device); the external power element allows the handling of an higher current since it dissipates the power externally (the power dissipated by a linear driver supplied at V_{Supply} and regulating a voltage $V_{LINmain\_OUT}$ with an output current I_{OUT} is about: $P_d= (V_{Supply}-V_{LINmain\_OUT})*I_{OUT}$.

Figure 10. Linear main regulator with external bipolar for high current

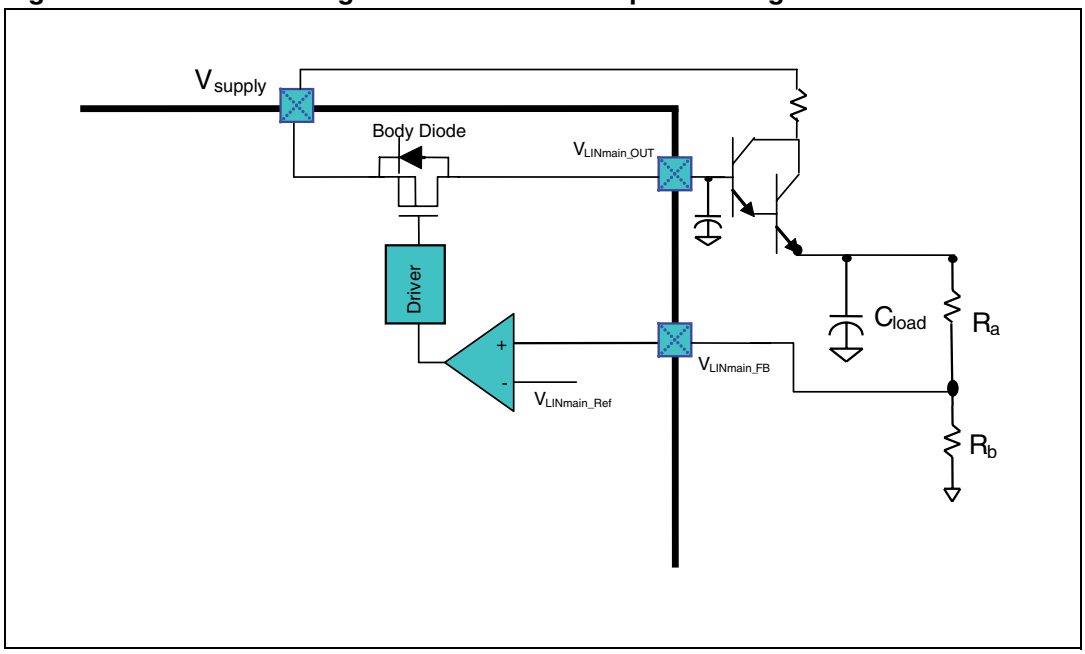

Whichever configuration is used (regulator or controller), a ceramic capacitor must be connected on the output pin towards ground to guarantee the stability of the regulator; the value of this capacitance is in the range of 100 nF to 1 µF depending on the regulated voltage;

- $V_{LINmain\_OUT}$ = 0.8 V --> 1 µF
- 0.8V< $V_{LINmain\_OUT}$ < 2.5 V --> 0.68 µF
- 2.5V= $V_{LINmain\_OUT}$ 5 V --> 0.33 µF
- $V_{LINmain\_OUT}$ > 5 V --> 0.1 F

When this regulator is disabled, the whole circuit is switched off and the current consumption is reduced to a very low level both from V3v3 and from V_{Supply}. When in this condition, the output pin is pulled low by an internal switch.

12 Main switching regulator

Main switching regulator is an asynchronous switching regulator intended to be the source of the main voltage in the system. It implements a soft start strategy and could be a system regulator so even if its output voltage V_{SWmain} is not used to power any internal circuit, L6460 will check that it is in the good value range before enabling all its internal functions. When L6460 detects a system regulator under-voltage event with a duration longer than the period defined by the deglitch filter (t_{prim_uv}), it will enter in reset state signaling this event to the microcontroller by pulling low the nRESET pin and disabling most of its internal block (e.g. bridges, GPIOs, …).

The output voltage will be externally set by a divider network connected to feedback pin. To reduce as much as possible the regulation voltage error L6460 has the possibility to choose between four feedback voltage references (and, as a consequence, four under-voltage thresholds) using the serial interface. The feedback reference voltage selection is made by writing the SelFBRef bits in the MainSwCfg register.

Here after are summarized the primary features of this regulator:

- Internal power switch.
- Soft start circuitry to limit inrush current flow from primary supply.
- Internally generated PWM (250 kHz switching frequency).
- Nonlinear pulse skipping control.
- Protected against load short circuit.
- Cycle by cycle current limiting using internal current sensor.
- Under voltage signal (both continuous and latched) accessible through SPI.

When L6460 is in “low power mode”, this regulator will be disabled.

In order to save external components and power when using two or more L6460 IC’s on the same board, the primary switching regulator can be disabled by serial interface. Care must be paid using this function because an under-voltage on this regulator, as previously seen, will be read as a fault condition by L6460.

12.1 Pulse skipping operation

Pulse skipping is a well known, non linear, control strategy used in switching regulators.

In this technique (see *Figure 11*) the feedback comparator output is sampled at the beginning of each switching cycle. At this time, if the sampled value shows that output voltage is lower than requested one, the complete PWM duty cycle is applied to power switch; otherwise no PWM is applied and the switching cycle is skipped. Once PWM is applied to power element only a current limit event can disable the power switch before the whole duty cycle is finished.

Figure 11. Main switching regulator functional blocks

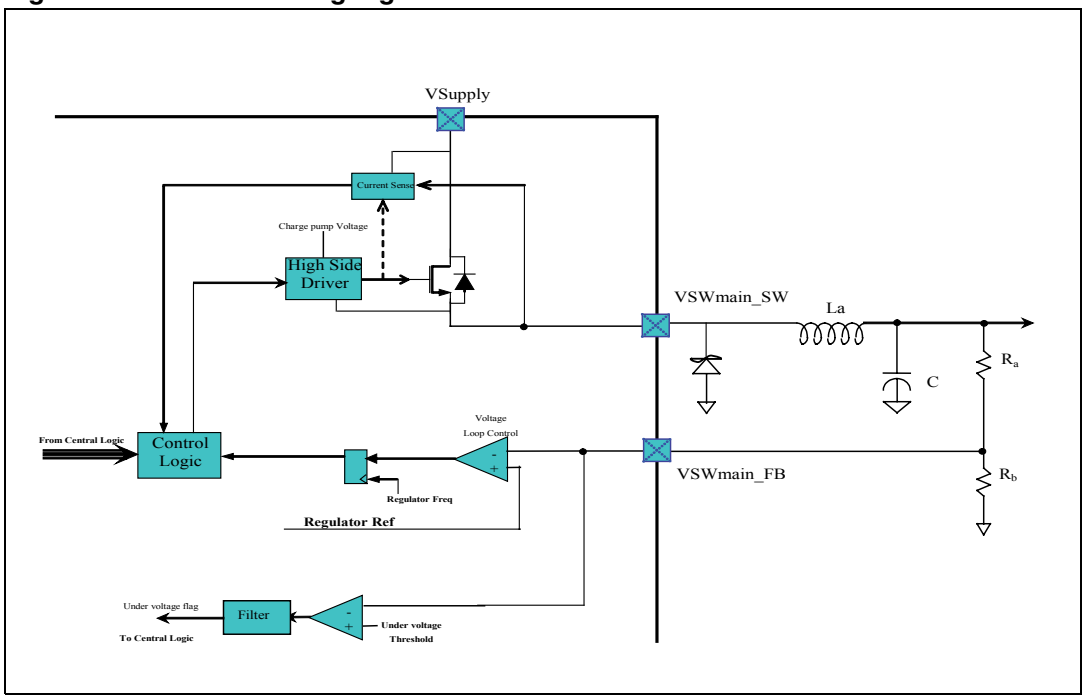

In pulse skipping control the duty cycle must be chosen by the user depending on supply voltage and output regulated voltage. Therefore the switching regulator has 4 possible duty cycles that can be changed by writing the VmainSwSelPWM bits in the MainSwCfg register according to following *Table 10*.

Table 10. Main switching regulator PWM specification

MainSwCfg register	Duty cycle value	Comments
VmainSwSelPWM[1:0]	Typical	
00	12%	
01	15%	
10	26%	Default state
11	63.5%	

The output current is limited to a value that can be set by means of Selllimit bit in the MainSwCfg register according to following *Table 11*.

Table 11. Main switching regulator current limit

Selllimit	Current limit (min)	Comments
0	3.3A	Default state
1	2.3A	

13 Switching regulator controller

This circuit controls an external FET to implement a switching buck regulator using a non linear pulse skipping control with internally generated PWM signal.

The output voltage will be externally set by a divider network connected on feedback pin. To reduce as much as possible the regulation voltage error L6460 has the possibility to switch between four regulator feedback voltage references (and, as a consequence, four under-voltage thresholds) using serial interface. The feedback reference voltage is selected by writing the SelFBRef bits in the SwCtrCfg.

This regulator is switched off when L6460 is powered up for the first time and can be enabled using L6460's SPI interface.

Here after are summarized the main features of the regulator:

- Soft start circuitry to limit inrush current flow from primary supply.
- Changeable feedback reference voltage
- Internally generated PWM (250 kHz switching frequency).
- Nonlinear pulse skipping control.
- Protected against load short circuit.
- Cycle by cycle current limiting using internal current sensor.
- Under voltage signal (both continuous and latched) accessible through SPI.

Figure 12. Switching regulator controller functional blocks

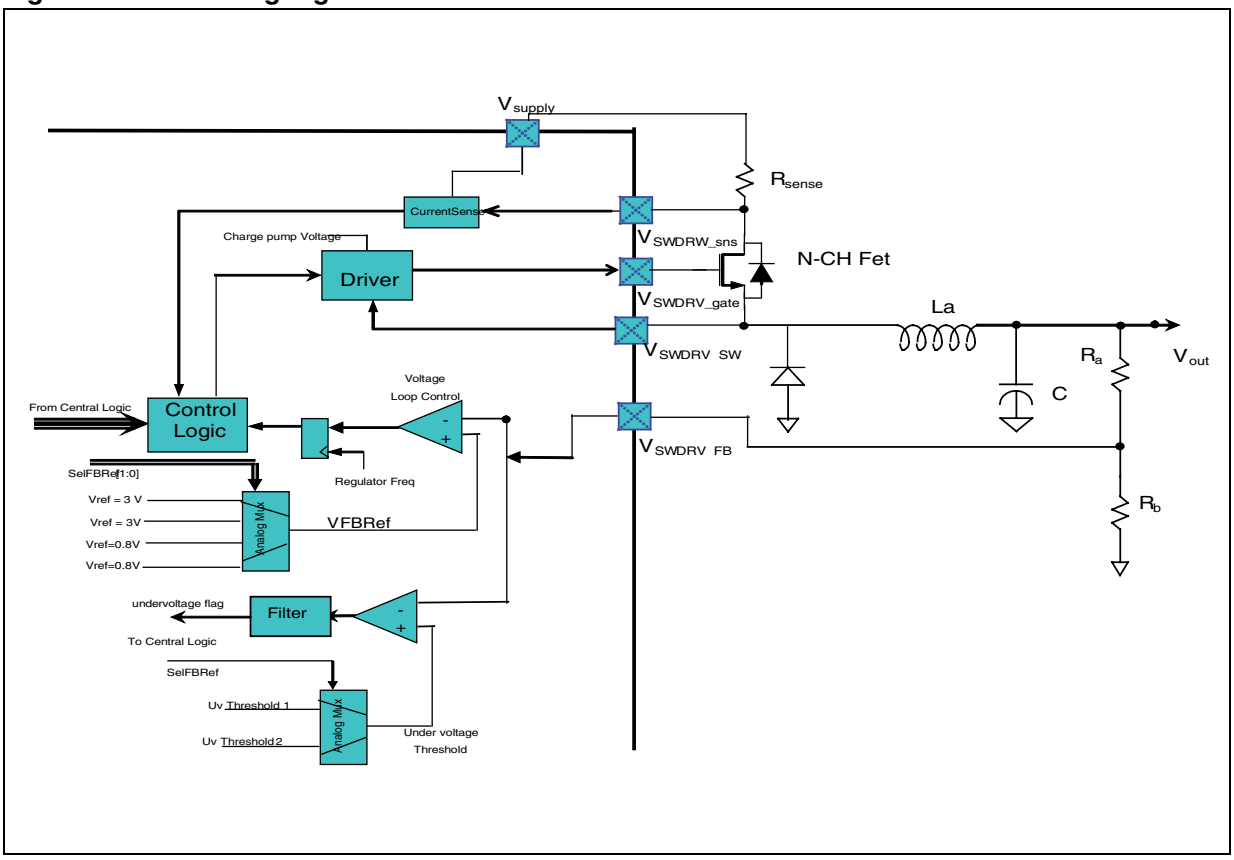

13.1 Pulse skipping operation

Pulse skipping strategy has already been explained on main switching regulator section.

This regulator has 4 possible PWM duty cycles that can be changed writing in the SelSwCtrPWM bits in the SwCtrCfg register using SPI.

Table 12. Switching regulator controller PWM specification

SwCtrCfg register	Duty cycle value	Comments
SelSwCtrPWM[1:0]	Typical	
00	9%	
01	12%	
10	22.5%	Default state
11	58%	

13.2 Output equivalent circuit

The switching regulator controller output driving stage can be represented with an equivalent circuit as in the *Figure 13*:

Figure 13. Switching regulator controller output driving: equivalent circuit

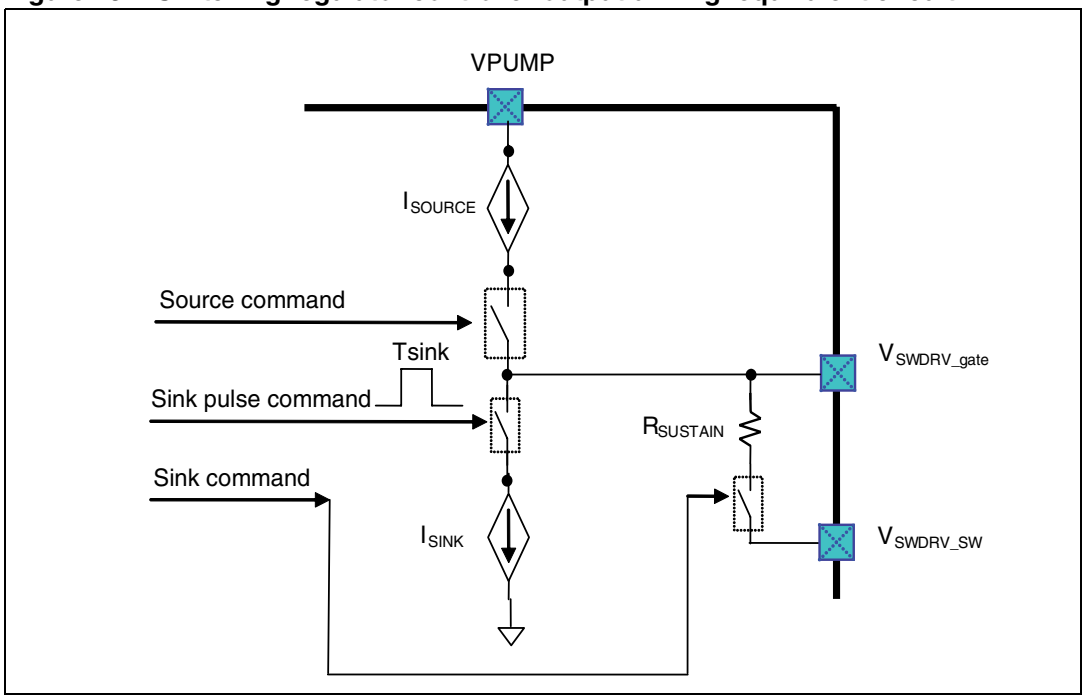

As can be seen from the above figure, the external switch gate is charged with a current generator I_{SOURCE} and it is discharged towards ground with a current generator I_{SINK} that is applied for a T_{SINK} pulse while an equivalent resistor $R_{SUSTAIN}$ is connected between gate and source until the sink command is present.

13.3 Switching regulator controller application considerations

This controller can implement a step-down switching regulator used to provide a regulated voltage in the range 0.8 V – 32 V. Such kind of variation could be managed by considering some constraints in the application and particularly by choosing the correct feedback reference voltage as indicated in the *Table 13*.

Table 13. Switching regulator controller application: feedback reference

Output regulated voltage range	Feedback voltage reference
$0.8V \leq V_{out} < 5V$	0.8V - 1V
$5V \leq V_{out} \leq 32V$	2.5V - 3V

An example of application can be considered the following, supposing the external mosfet type STD12NF06L:

- Max DC current load = 3 A
- Typ Over current threshold = 3 A * 1.5 = 4.5 A
- L = 150 µH
- C = 220-330 µF

In this conditions the step-down regulator will result over-load protected, short-circuit protected over all the regulated voltage range and the V_{Supply} range.

Other application configurations could be evaluated before being implemented.

14 Power bridges

L6460 includes four H bridge power outputs (each one made by two independent half bridges) that are configurable in several different configurations.

Each half bridge is protected against: over-current, over-temperature and short circuit to ground, to supply or across the load. When an over current event occurs, all outputs are turned off (after a filter time), and the over current bit is stored in the internal status register that can be read through SPI.

Positive and negative voltage spikes, which occur when switching inductive loads, are limited by integrated freewheeling diodes (see *Figure 14*).

Figure 14. H Bridge block diagram

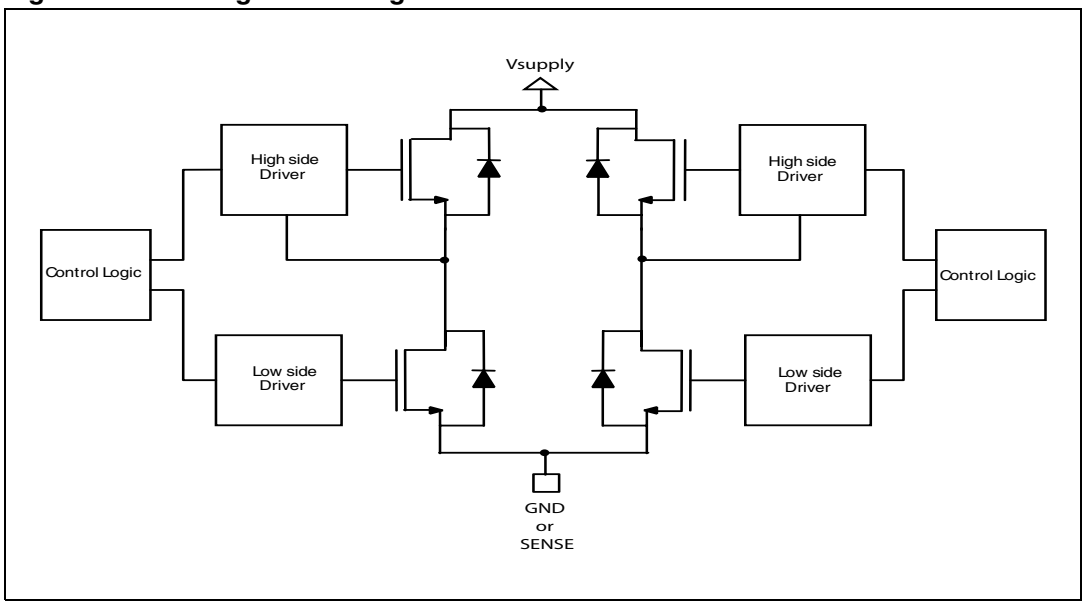

During the start up procedure the bridges are in high impedance and after that they can be enabled through SPI. When a fault condition happens, i.e. an over-temperature event, the bridges return in their start-up condition and they need to be re-enabled from the micro controller.

The bridges can use PWM signals internally generated or externally provided (supplied through the GPIO pins). Internally generated PWM signals will run at approximately 31.25kHz with a duty cycle that, through serial interface, can be programmed and incremented in steps of $1/(512*F_{osc})$. To reduce the peak current requested from supply voltage when all bridges are switching, the four internally generated PWM signals are out-of-phase.

Each half bridge will use the PWM signal selected by the respective MtrXSelPWMSideY[1:0] (X stands for 1, 2, 3 or 4; Y stands for A or B) bits in the SPI, but if two half bridges are configured as a full bridge, only the PWM signal chosen for side A will be used to drive the resulting H bridge.

More in detail the PWM selection truth table will be as describe in the following tables:

Table 14. PWM selection truth table for bridge 1 or 2

MtrXSelPWMSideY [1]	MtrXSelPWMSideY [0]	Selected PWM(1)
0	0	MotorXPWM (Configurable by means of MtrXCfg register).
0	1	AuxXPWM (Configurable by means of AuxPwmXCtrl register).
1	0	ExtPWM1 (from GPIO 9 input)
1	1	ExtPWM2 (from GPIO 10 input)

1. In this table X stands for 1 or 2, Y stands for A or B.

Table 15. PWM selection truth table for bridge 3 or 4

MtrXSelPWMSideY [1]	MtrXSelPWMSideY [0]	Selected PWM(1)
0	0	MotorXPWM (Configurable by means of MtrXCfg register).
0	1	AuxXPWM (Configurable by means of AuxPwmXCtrl register).
1	0	ExtPWM3 (from GPIO 2 input)
1	1	ExtPWM4 (from GPIO 11 input)

1. In this table X stands for 3 or 4, Y stands for A or B.

In *Figure 15* is reported a block diagram representing the possible PWM choices for each L6460 half bridges. The figure is related only to bridges 1 and 2, but it could be assumed to be valid also for bridges 3 and 4, with few differences due to different possible configurations of these last drivers.

Figure 15. Bridge 1 and 2 PWM selection

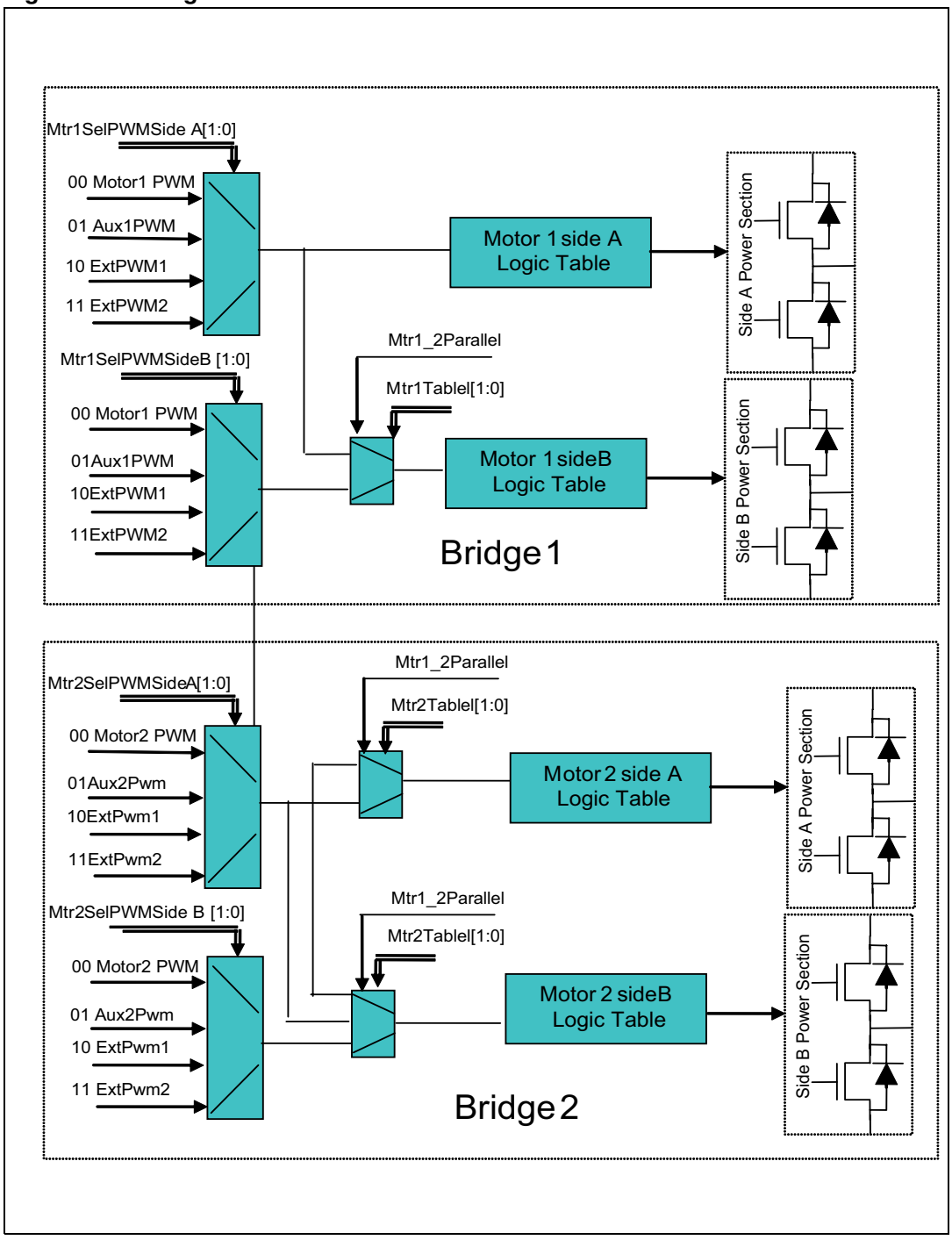

14.1 Possible configurations

The selection of the bridge configuration is done through SPI, by writing the MtrXTable[1:0] bits in the MtrXCfg register. The table below shows the correspondence between MtrXTable[1:0] bits and the bridge configuration.

Table 16. Bridge selection

MtrXTable[1]	MtrXTable[0]	Bridge configuration
0	0	Full bridge
0	1	High or low side switch
1	0	Half bridge
1	1	High or low side switch

Bridge 1 & 2 can be paralleled by means of Mtr1_2Parallel bit in the Mtr1_2Cfg register: Bridge 1 and 2 paralleled will form superbridge1, bridge X side A and bridge X side B paralleled form SuperHalfBridgeX or SuperSwitchX.

Bridge 3 & 4 can be configured by means of Mtr3_4CfgTable[1:0] bits in the Mtr3_4Cfg register according to following table:

Table 17. Bridge 3 and 4 configuration

Mtr3_4CfgTable[1]	Mtr3_4CfgTable[0]	Bridge 3 and 4 configuration
0	0	Two independent bridges
0	1	Two bridges in parallel
1	0	Stepper motor
1	1	Stepper motor

The possible configurations for the bridges are described in the following.

14.1.1 Full bridge

When in full bridge configuration, the drivers will behave according to the following truth table:

Table 18. Full bridge truth table

TSD	nRESET	Low power mode	Enable	Current limit	MtrXCtrl SideA	MtrXCtrl SideB	PWM	OUT+	OUT-
1	X	X	X	X	X	X	X	Z	Z
0	0	X	X	X	X	X	X	Z	Z
0	1	1	X	X	X	X	X	Z	Z
0	1	0	0	X	X	X	X	Z	Z
0	1	0	1	1	X	X	X	Z	Z
0	1	0	1	0	0	0	X	0	0
0	1	0	1	0	0	1	0	1	1
0	1	0	1	0	0	1	1	0	1
0	1	0	1	0	1	0	0	1	1
0	1	0	1	0	1	0	1	1	0
0	1	0	1	0	1	1	X	1	1

Note: *Note: When “low power mode” is active, the bridges will enter in low power state and will reduce its biasing thus contributing to the power saving.*

When a current limit event occurs this event will be latched and the bridges will remain in high impedance state for the off time.

14.1.2 Parallel configuration (super bridge)

Bridges 1, 2, 3 and 4 can be configured to be used two by two (1 plus 2, 3 plus 4) as one super bridge thus enabling the driving of loads (motors) requiring high currents. In this configuration the half bridges will be paralleled and will work as one phase of the super-bridge just created: the two phases + will become phase + of the newly created super-bridge while the two phases - will become phase –.

Figure 16. Super bridge configuration

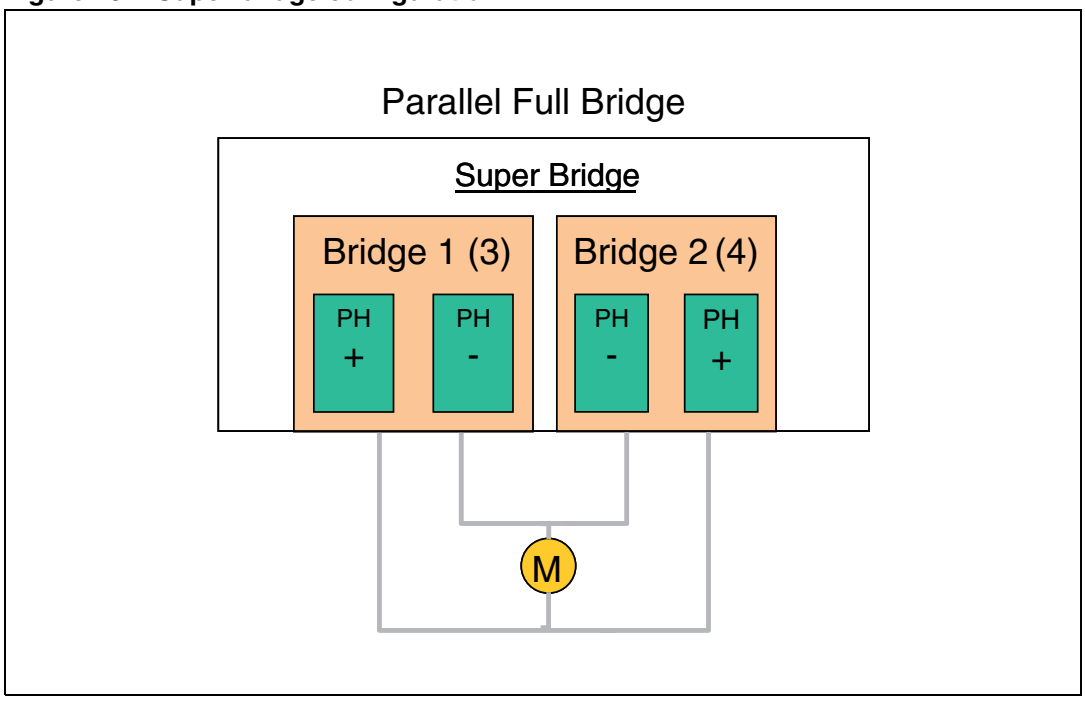

When this configuration is chosen for bridges 1 (3) and 2 (4), the resulting bridge will use the driving logic of bridge 1 (3) so for programming it must be used the bridge 1 (3) control and status bits (direction, PWM, ...): i.e. the used PWM signal will be chosen by Mtr1SideAPwmSel[1:0] (Mtr3SideAPwmSel[1:0]) bits in SPI.

If the bridges are not configured to be used in parallel, each side of the bridge will use the PWM selected by the respective MtrXPWMYSel[1:0] bits in the SPI, but if one of the two drivers is configured as a full bridge only one of the two selected PWM will be used to drive the motor and this is the PWM chosen for side A.

In order to avoid any problem coming from different propagation times of PWM signals the anti-crossover dead times are slightly increased when the bridges are paralleled.

14.1.3 Half bridge configuration

Each bridge can be configured to be used as 2 independent half bridges or as 1 super half bridge (see *Figure 17*). It is also possible to parallel more than one bridge and use all of them as a single super half bridge.

Figure 17. Half bridge configuration

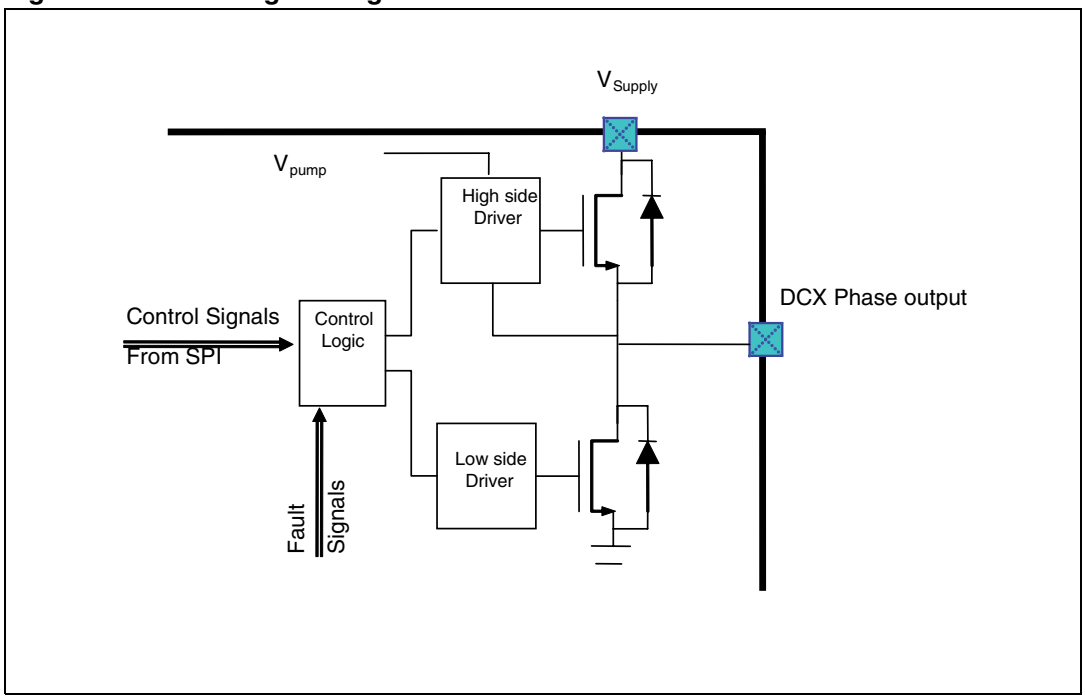

In this case each half bridge will behave according to the following truth table.

Table 19. Half bridge truth table

TSD	nReset	Low power mode	Enable	Current limit	MtrXCtrl SideA/B	PWM	OUT
1	X	X	X	X	X	X	Z
0	0	X	X	X	X	X	Z
0	1	1	X	X	X	X	Z
0	1	0	0	X	X	X	Z
0	1	0	1	0	0	0	Z
0	1	0	1	0	0	1	0
0	1	0	1	0	1	0	Z
0	1	0	1	0	1	1	1
0	1	0	1	1	X	X	Z

Note: When "low power mode" bit is active the bridges will reduce its biasing thus contributing to the power saving.

When a current limit event occurs this event will be latched and the bridges will remain in high impedance state for the off time.

14.1.4 Switch configuration

Each bridge can be configured to be used as 2 independent switches that connects the output to supply or to ground. It is also possible to parallel the two switches and use them as a single super switch.

All resulting switches will behave according to the following truth table.

Table 20. Switch truth table

TSD	nReset	Low power mode	Enable	Current limit	MtrXCtrl SideA/B	PWM	OUT
1	X	X	X	X	X	X	Z
0	0	X	X	X	X	X	Z
0	1	1	X	X	X	X	Z
0	1	0	0	X	X	X	Z
0	1	0	1	0	0	X	Z
0	1	0	1	0	1	0	1
0	1	0	1	0	1	1	0
0	1	0	1	1	X	X	Z

Note: When "low power mode" bit is active the bridge will reduce its biasing thus contributing to the whole power saving.

When a current limit event occurs this event will be latched and the bridge will remain in high impedance state for the toff time.

14.1.5 Bipolar stepper configuration

The bridges 3 and 4 can be configured to be used as a micro-stepping, bidirectional driver for bipolar stepper motors.

The primary features of the driver are the following:

- Internal PWM current control.
- Micro stepping.
- Fast, mixed and slow current decay modes.

Each H-bridge is controlled with a fixed and selectable off-time PWM current control circuit that limits the load current to a value set by choosing $V_{STEPREF}$ voltage by means of the internal DAC and an the external R_{SENSE} value.

The max current level could be calculated using the formula:

$$I_{MAX}=V_{STEPREF}/R_{SENSE}$$

To obtain the best current profile, the user can choose three different current decay modes: slow, fast and mixed. Initially, during Ton, a diagonal pair of source and sink power MOS is enabled and current flows through the motor winding and the sense resistor. When the voltage across the sense resistor reaches the programmed DAC output voltage, the control logic will change the status of the bridge according to the selected decay mode (slow, fast or mixed). In slow decay mode the current is recirculated through the path including both high

side power MOS for the whole off time. In fast decay mode the current is recirculated through the high and low side power MOS opposite respect to those forcing current to increase. Mixed decay mode is a selectable mix of the previous two modes (fast decay followed by slow decay) and allows the user to find the best trade off between load current ripple and fast current levels transition. Additionally, by setting the SeqMixedOnlyInDecreasingPh bit in the StpCfg1 register, the user can choose to apply the fast decay percentage in mixed mode always or only when the current is decreasing (i.e from 90° to 180° and from 270° to 360° of the sinusoidal wave).

By using SPI interface the user can choose:

- Control type (external firmware control, half step, normal drive, wave drive, micro-step).
- Up to 16 current levels (quasi-sinusoidal increments) for each bridge.
- Current direction.
- Decay mode.
- Blanking time.
- Off time (32 values from 2µs to 64µs).
- Percentage of fast decay respect to toff (when in mixed decay mode).

Figure 18. Bipolar stepper configuration

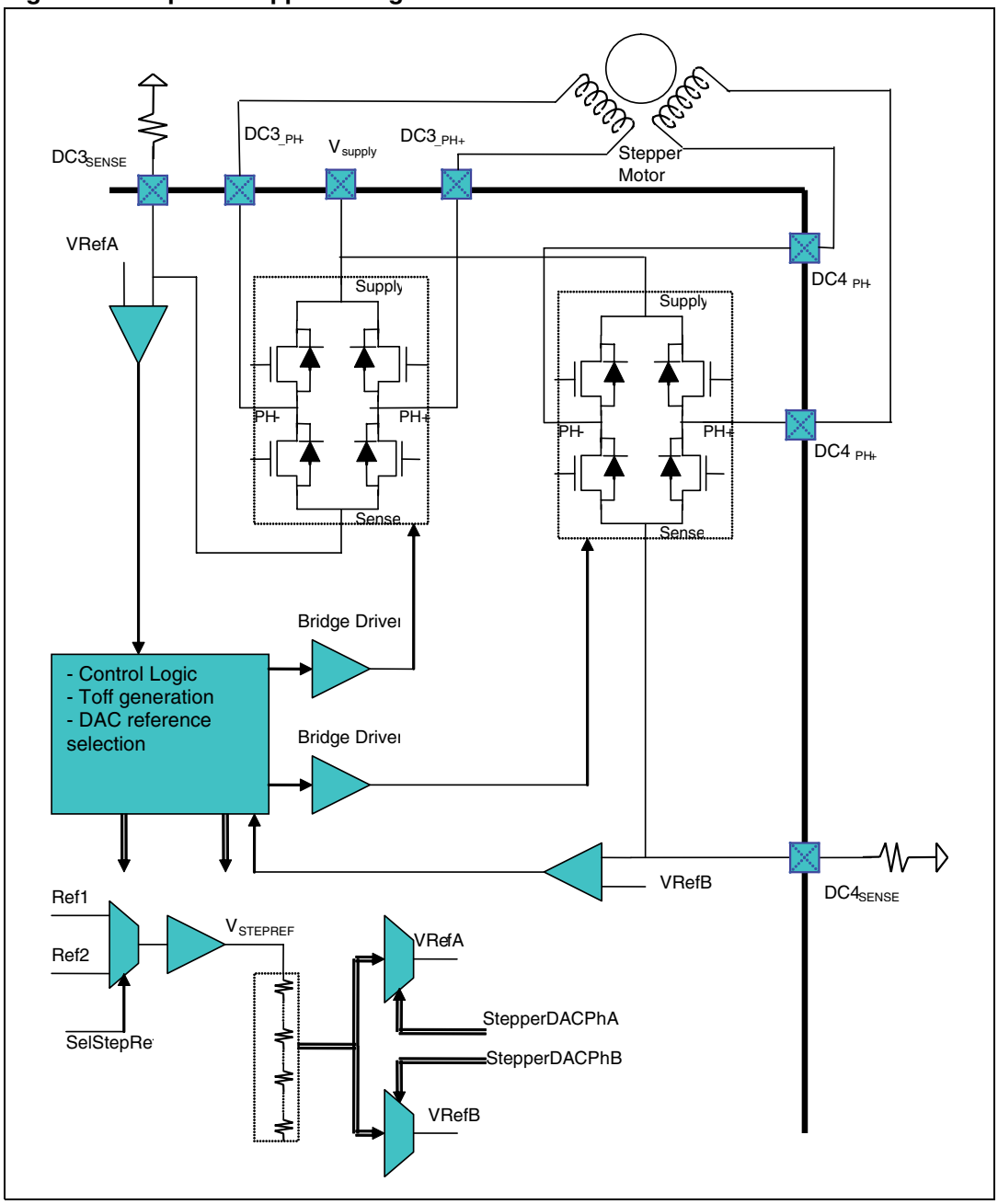

Using the StepCtrlMode[2:0] bits in StepCfg1 register, L6460 can be programmed to internally generate the stepping levels. In these cases and depending on the StepFromGpio bit in the StpCfg1 register the Stepper driver will move to next step each time the StepCmd bit is set at logic level “1” or at each pulse transition longer than ~1µs externally applied on GPIO12 (StepReq signal), according to *Table 21*.

Table 21. Sequencer driver

StepFromGpio	Sequencer driver
0	StepCmd bit in StepCmd register.
1	GPIO12 input pin.

The allowable control modes are as follows:

1. Stepping sequence left to external microcontroller: in this mode the current level in each motor winding is set by the microcontroller via the serial interface.
2. Full step: in this mode the electrical angle will change by 90° steps at each StepReq signal transition. There are two possibilities:
   – Normal step (two phases on): in normal step mode both windings are energized simultaneously and the current will be alternately reversed. The resulting electrical angles will be 45°, 135°, 225° and 315°.
   – Wave drive (one phase on): In wave drive mode each winding is alternately energized and reversed. The resulting electrical angles will be 90°, 180° and 270° and 360°.
3. Half step: in this mode, one motor winding is energized and then two windings alternately so the electrical angles the motor will do when rotating in clockwise direction and using the same current limit in both the phases are: 45°, 90°, 135°, 180°, 225°, 270°, 315° and 360°.
4. Microstepping: in this mode the current in each motor winding has a quasi sinusoidal profile. The increment between each step is obtained at each transition of StepCmd bit in StepCmd register. The difference between each step could be chosen (4, 8 or 16 levels for each phase) according to following table:

Table 22. Stepper driving mode

StepCtrlMode[2:0]	Control mode	Description
000 or 111	No Control	Stepping sequence control left to the external controller
001	Half Step	Half step
010	Normal Step	Full step (two phases on)
011	Wave Drive	Full step (one phase on)
100	1/4 Step	Four micro steps
101	1/8 Step	Eight micro steps
110	1/16 Step	Sixteen micro steps

Note: When in 1/16 step mode, the best phase approximation of sinusoidal wave, is obtained by repeating the "F" step as follows: 0, 1, 2, 3, … , D, E, F, F, F, E, D, … , 3, 2, 1, 0

When internal stepping sequence generation is used, the stepping direction is set by the StepDir bit according to the *Table 23*.

Table 23. Stepper sequencer direction

StepDir	Direction
0	Counter clockwise (CCW)
1	Clockwise (CW)

Note: It is intended as clockwise the sequence that forces a clockwise rotation of the versors representing the current module and phase.

An internal DAC is used to digitally control the output regulated current. The available values are chosen to provide a quasi sinusoidal profile of the current. The current limit in each phase is decided by PhADAC[3:0] bits for phase A and PhBDAC[3:0] bits for phase B. The table below describes the relation between the value programmed in the stepper DAC and the current level.

Table 24. DAC

PhXDAC [3:0]	Phase current ratio respect to I_{MAX}			
	Min	Typ	Max	Unit
0000		(Hi-Z)		
0001	-	9.8	-	% of I_{MAX}
0010	-	19.5	-	% of I_{MAX}
0011	-	29.0	-	% of I_{MAX}
0100	-	38.3	-	% of I_{MAX}
0101	-	47.1	-	% of I_{MAX}
0110	-	55.6	-	% of I_{MAX}
0111	-	63.4	-	% of I_{MAX}
1000	-	70.7	-	% of I_{MAX}
1001	-	77.3	-	% of I_{MAX}
1010	-	83.1	-	% of I_{MAX}
1011	-	88.2	-	% of IMAX
1100	-	92.4	-	% of I_{MAX}
1101	-	95.7	-	% of I_{MAX}
1110	-	98.1	-	% of I_{MAX}
1111	-	I_{MAX}	-	

Note: The min and max values are guaranteed by testing the percentage of VSTEPREF that allows the commutation of the Rsense comparator.

$I_{MAX}=V_{STEPREF}/R_{SENSE}$.

To obtain the best phase approximation of a sinusoidal wave, the user needs to repeat the final (100%) value. So the full values sequence should be as follows: 0, 1, 2, 3 … D, E, F, F, F, E, D … 3, 2, 1, 0.

Even if the total spread shows overlapping between current steps, the monotonicity is guaranteed by design.

When the internal sequencer the minimum angle resolution is nominally 5.625°, so depending on the control mode chosen, the selectable steps are *Table 25*.

Table 25. Internal sequencer

Control mode						Typical output current (% of IMAX)		Resulting electrical angle
Half step	Full step (2 phases on)	Full step (1 phase on)	1/4 step	1/8 step	1/16 step	Phase A (sin)	Phase B (cos)	Electrical degrees
1	1		1	1	1	70.7	70.7	45°
					2	77.3	63.4	50.6°
				2	3	83.1	55.6	56.2°
					4	88.2	47.1	61.9°
			2	3	5	92.4	38.3	67.5°
					6	95.7	29.0	73.1°
				4	7	98.1	19.5	78.8°
					8	100	9.8	84.4°
2		1	3	5	9	100	HiZ	90°
					10	100	-9.8	95.6°
				6	11	98.1	-19.5	101.2°
					12	95.7	-29.0	106.9°
			4	7	13	92.4	-38.3	112.5°
					14	88.2	-47.1	118.1°
				8	15	83.1	-55.6	123.8°
					16	77.3	-63.4	129.4°
3	2		5	9	17	70.7	-70.7	135°
					18	63.4	-77.3	140.6°
				10	19	55.6	-83.1	146.2°
					20	47.1	-88.2	151.9°
			6	11	21	38.3	-92.4	157.5°
					22	29.0	-95.7	163.1°
				12	23	19.5	-98.1	168.8°
					24	9.8	-100	174.4°
4		2	7	13	25	HiZ	-100	180°
					26	-9.8	-100	185.6°
				14	27	-19.5	-98.1	191.2°
					28	-29.0	-95.7	196.9°
			8	15	29	-38.3	-92.4	202.5°
					30	-47.1	-88.2	208.1°
				16	31	-55.6	-83.1	213.8°

Table 25. Internal sequencer (continued)

Control mode						Typical output current (% of IMAX)		Resulting electrical angle
Half step	Full step (2 phases on)	Full step (1 phase on)	1/4 step	1/8 step	1/16 step	Phase A (sin)	Phase B (cos)	Electrical degrees
	3				32	-63.4	-77.3	219.4°
5			9	17	33	-70.7	-70.7	225°
					34	-77.3	-63.4	230.6°
				18	35	-83.1	-55.6	236.2°
					36	-88.2	-47.1	241.9°
			10	19	37	-92.4	-38.3	247.5°
					38	-95.7	-29.0	253.1°
				20	39	-98.1	-19.5	258.8°
					40	-100	-9.8	264.4°
6		3	11	21	41	-100	HiZ	270°
					42	-100	9.8	275.6°
				22	43	-98.1	19.5	281.2°
					44	-95.7	29.0	286.9°
			12	23	45	-92.4	38.3	292.5°
					46	-88.2	47.1	298.1°
				24	47	-83.1	55.6	303.8°
					48	-77.3	63.4	309.4°
7	4		13	25	49	-70.7	70.7	315°
					50	-63.4	77.3	320.6°
				26	51	-55.6	83.1	326.2°
					52	-47.1	88.2	331.9°
			14	27	53	-38.3	92.4	337.5°
					54	-29.0	95.7	343.1°
				28	55	-19.5	98.1	348.8°
					56	-9.8	100	354.4°
8		4	15	29	57	HiZ	100	360°/0°
					58	9.8	100	5.6°
				30	59	19.5	98.1	11.2°
					60	29.0	95.7	16.9°
			16	31	61	38.3	92.4	22.5°
					62	47.1	88.2	28.1°

Table 25. Internal sequencer (continued)

Control mode						Typical output current (% of IMAX)		Resulting electrical angle
Half step	Full step (2 phases on)	Full step (1 phase on)	1/4 step	1/8 step	1/16 step	Phase A (sin)	Phase B (cos)	Electrical degrees
				32	63	55.6	83.1	33.8°
					64	63.4	77.3	39.4°

The voltage spikes on R_{sense} could be filtered by selecting an appropriate blanking time on the output of current sense comparator. The Blanking time selection is made by using the StepBlkTime[1:0] bits in the StpCfg1 register.

The stepper driver off time could be programmed by means of the StepOffTime[4:0] bits in StpCfg1 register.

Table 26. Stepper off time

StepOffTime[4:0]	Off time	Unit
	Typ	
00000	2	µs
00001	4	µs
00010	6	µs
00011	8	µs
00100	10	µs
00101	12	µs
00110	14	µs
00111	16	µs
01000	18	µs
01001	20	µs
01010	22	µs
01011	24	µs
01100	26	µs
01101	28	µs
01110	30	µs
01111	32	µs
10000	34	µs
10001	36	µs
10010	38	µs
10011	40	µs

Table 26. Stepper off time (continued)

StepOffTime[4:0]	Off time	Unit
	Typ	
10100	42	µs
10101	44	µs
10110	46	µs
10111	48	µs
11000	50	µs
11001	52	µs
11010	54	µs
11011	56	µs
11100	58	µs
11101	60	µs
11110	62	µs
11111	64	µs

By means of MixDecPhA[4:0] and MixDecPhB[4:0] in StepCfg2 register, the percentage of off time during which each phase will stay in fast decay mode could be programmed according to *Table 28*.

Table 27. Stepper fast decay

MixDecPhX[4:0]	Fast decay percentage during off time	Unit
	Typ	
00000	0	%
00001	6.25	%
00010	12.5	%
00011	18.75	%
00100	25	%
00101	31.25	%
00110	37.6	%
00111	43.75	%
01000	50	%
01001	56.25	%
01010	62.5	%
01011	68.75	%
01100	75	%
01101	81.25	%
01110	87.5	%
01111	93.75	%
1xxxx	100	%

14.1.6 Synchronous buck regulator configuration (Bridge 3)

Bridge 3 can be configured to be used as 2 independent synchronous buck regulators or as a single high current synchronous buck regulator using GPIOs pins in order to close the voltage loop. The resulting regulator(s) will implement a non linear, pulse skipping, control loop using an internally generated PWM signal. The voltage will be set externally with a divider network and PWM duty cycle that can be programmed in order to ensure a proper regulation.

The regulator will be enabled/disabled using serial interface and will implement a soft start strategy similar to that used by primary switching regulator.

Here after are summarized the primary features of the regulator(s):

- Synchronous rectification
- Automatic low side disabling when current in the inductance reaches 0 to optimize efficiency at low load
- Pulse skipping control
- Internally generated PWM
- Cycle by cycle current limiting using internal current sensor
- Protected against load short circuit
- Soft start circuitry
- Under voltage signal (both continuous and latched) accessible through serial interface.

Figure 19. Regulator block diagram

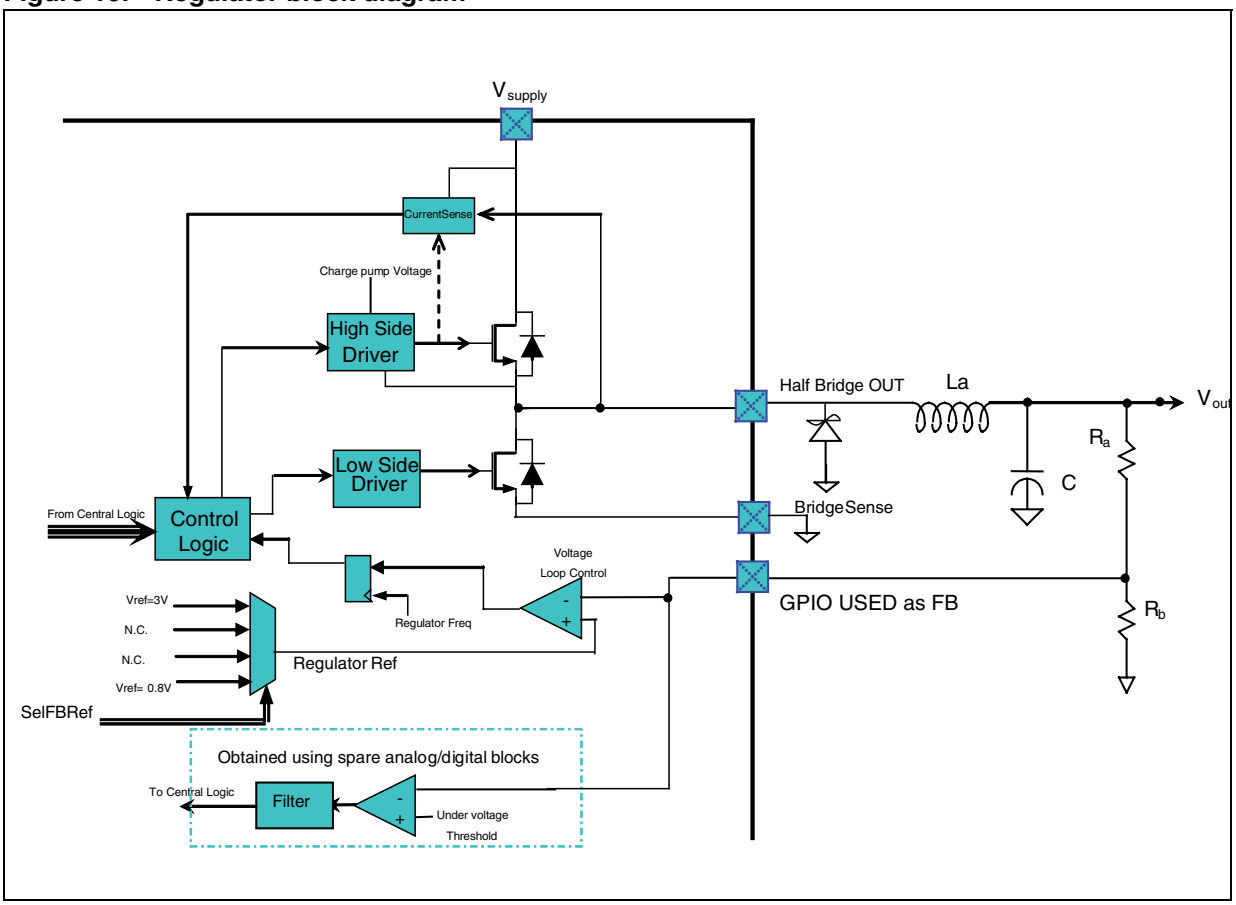

Depending on the load current, there could be the necessity to add a Schottky diode on output to reduce internal thermal dissipation. This diode must be placed near to the pin and must be fast recovery and low series resistance type.

For detail about pulse skipping please refer to main switching regulator *Section 13.3 on page 54*.

The output voltage will be externally set by a divider network connected on feedback pin. To reduce as much as possible the regulation voltage error L6460 has the possibility to switch between four regulator feedback voltage references (and, as a consequence, four under-

voltage thresholds) using serial interface. The feedback reference voltage is selected by writing the SelFBRef[1:0] bits in the Aux1SwCfg or Aux2SwCfg registers.

The switching regulators have four possible PWM duty cycles that can be changed using SPI according to *Table 28*.

Table 28. PWM specification

AuxXPWMTable[1:0]	Typical duty cycle value	Comments
00	10%	
01	13%	Default state for AUX1
10	24%	Default state for AUX2
11	61%	

14.1.7 Regulation loop

As seen before L6460 contains 2 regulation loops for switching regulators that are used when bridge 3 is used as a regulator. These loops are assembled using internal comparators and filters similar to that used in main switching regulator.

When bridge 3 is not used for this purpose or when only one regulation loop is needed, the control loop is available on a GPIO output thus enabling the customer to assembly a basic buck switching regulator using an external Power FET. The comparators used in the above mentioned regulation loops are general purpose low voltage (3.3 V) comparators; when the relative regulation loop is not used they can be accessed as shown in the *Figure 20*.

Figure 20. Internal comparator functional block diagram

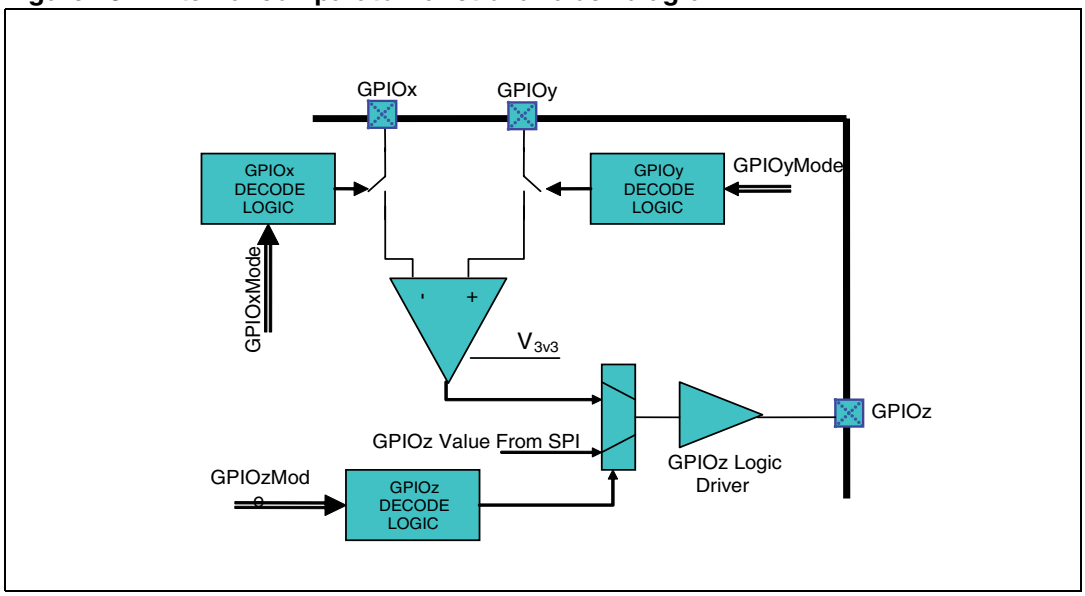

14.1.8 Battery charger or switching regulator (Bridge 4)

The functionality of this circuit is obtained by using the bridge 4 output stage. This circuit is powered directly from V_{Supply} and it is intended to be used as a battery charger or a switching regulator.

The control loop block diagram is shown in the *Figure 21*.

Figure 21. Battery charger control loop block diagram

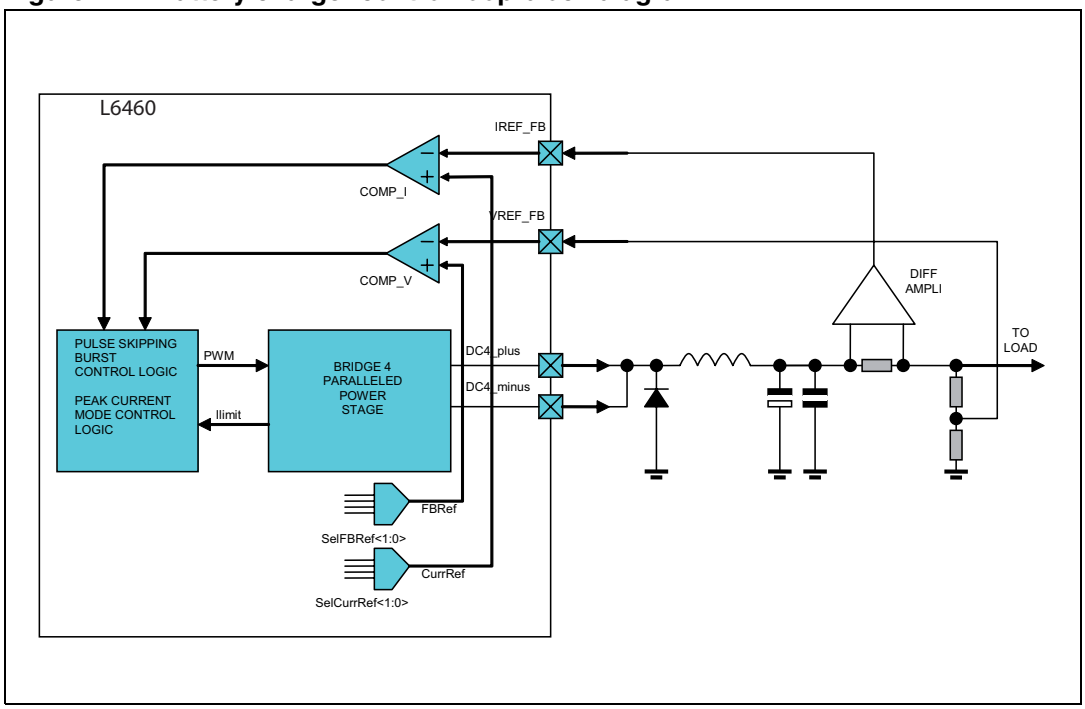

The battery charger control loop implements an asynchronous switching regulator intended to be used as a constant voltage/constant current programmable source.

When used as a simple switching regulator, it could be a system regulator depending on startup configurations

When a system regulator under-voltage event is detected L6460 will enter in reset state signaling this event to the microcontroller by pulling low the nRESET pin and disabling most of its internal blocks.

When the control loop is intended to be used as a battery charger, the Aux3BatteryCharge bit must be written in the Aux3SwCfg1 register. This is because in this case the undervoltage event that will be sure present when charging a battery (see battery charger profile in *Figure 22*) will not be considered during start up sequence.

The regulated output voltage will be externally set by a resistor divider network connected to V_{REF_FB} pin. L6460 has the possibility to choose between four voltage references (and, as a consequence, four under-voltage thresholds) using the serial interface. The feedback reference voltage selection is made by writing the SelFBRef[1:0] bits in the Aux3SwCfg1 register.

The regulation of the output current can be done externally, by using a sense resistor connected in series on the path that provides current to the load. By using an external differential amplifier the customer can set the desired V = f(I) characteristic, and therefore

the regulated current: the voltage provided at the I_{REF_FB} pin will be compared to the internal reference. L6460 has the possibility to choose between four voltage references using the serial interface, writing the SelCurrRef[1:0] bits in the Aux3SwCfg1 register.

Regardless of the CurrRef voltage, if the I_{REF_FB} pin remains below the chosen threshold, the internal current limitation will work (typical Ilimit current 4A).

The battery charge profile can be chosen by fixing the desired CurrRef and FBRef internal reference voltages and by choosing the desired V = f(I) trans-characteristic of the external differential amplifier.

In the *Figure 22* is shown a typical Li-Ion battery charge profile.

Figure 22. Li-ion battery charge profile

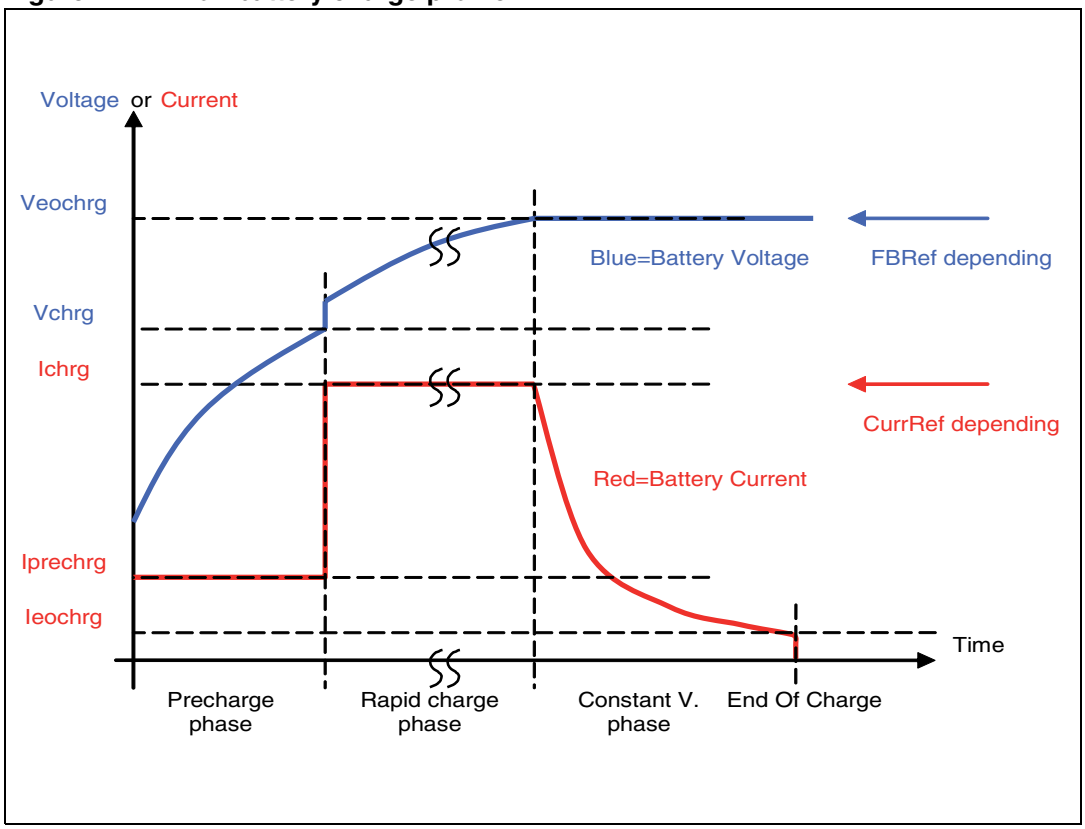

The battery charge loop control can be used to implement a buck type switching regulator. The regulated output voltage will be externally set by a resistor divider network connected to V_{REF_FB} pin, as already described and the current protection will be the one implemented internally in the Bridge4 section.

Figure 23. Simple buck regulator

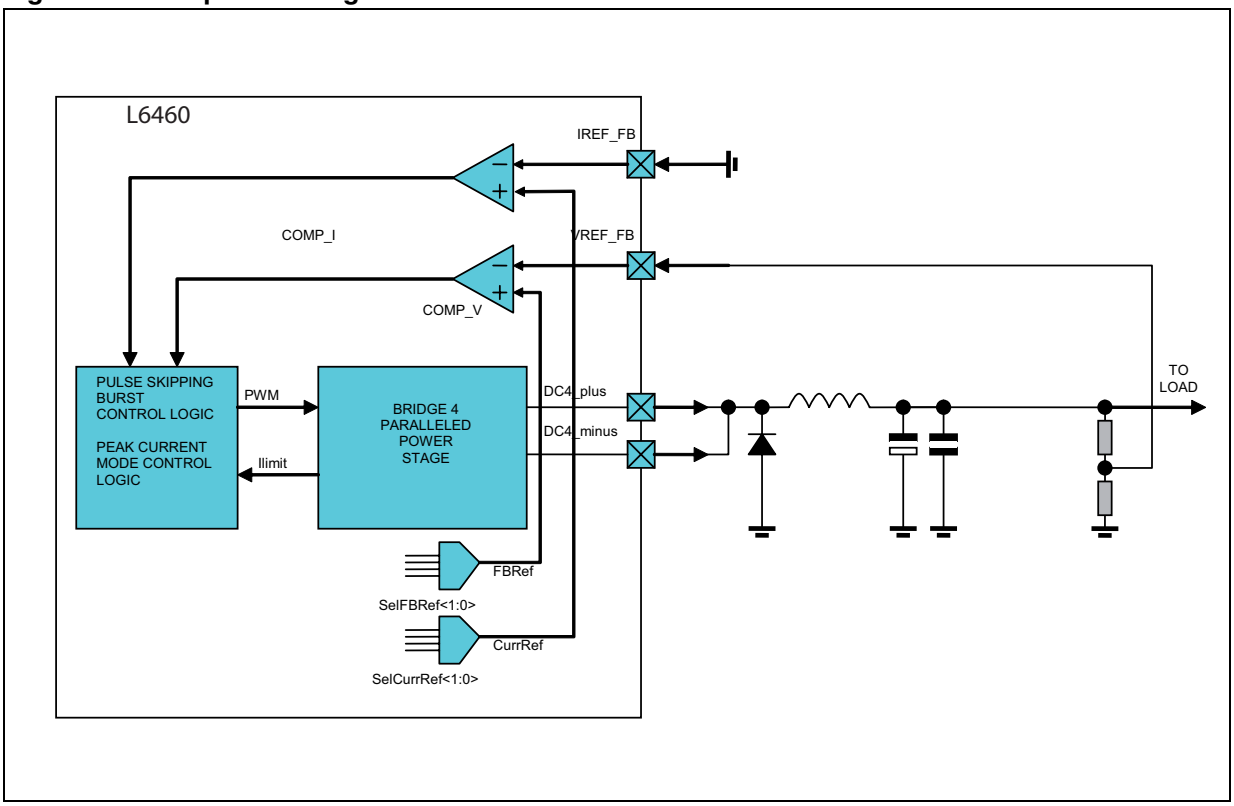

When this control loop is intended to be used as a simple buck regulator, the proper Aux3BatteryCharge bit must be written in the Aux3SwCfg1 register.

The regulator will also implement a soft start strategy.

When L6460 “low power mode” is enabled this regulator will be disabled.

Here after are summarized the primary features of the regulator:

- Internal power switch.
- Nonlinear pulse skipping control.
- Internally generated PWM (250 KHz switching frequency).
- Cycle by cycle current limiting using internal current sensor/ external current sense differential amplifier.
- Protected against load short circuit.
- Soft start circuitry to limit inrush current flow from primary supply.
- Under voltage signal (both continuous and latched) accessible through SPI.
- Over temperature protection.

In pulse skipping control PWM the duty cycle must be decided by the user depending on supply voltage and regulated voltage.

Therefore the switching regulator has 4 possible PWM duty cycles that can be changed writing in the Aux3PWMTable[1:0] bits in the Aux3SwCfg1 register according to the *Table 31*.

Table 29. Battery charger regulator controller PWM specification

Aux3PWMTable [1:0]	Typical duty cycle value	Comments
00	10%	
01	13%	
10	24%	Default state
11	61%	

15 AD converter

L6460 integrates and makes accessible via SPI a general purpose multi-input channel 3.3V analog to digital converter (ADC).

The ADC can be configured to be used as:

- 8-bit resolution ADC.
- 9-bit resolution ADC.

The result of the conversion will always be a 9-bit word; the difference between the two configurations is that, to speed up the conversion, the resolution is reduced when the ADC is used in the 8-bit resolution mode.

The ADC is seen at software level as a 2 channel ADC with different programmable sample times; a finite state machine will sample the requests done through the SPI interface on both the channel and will execute them in sequence.

When used as 8-bit resolution the ADC can achieve a higher throughput and, if the minimum sample time is used, one conversion is completed in t = 5.5 µs. When used as 9-bit resolution ADC the circuit is slower and the minimum sample times are disabled. In that case the conversion will be completed in a time t= 10 µs.

The use of ADC type must be decided at the start-up by writing in the one time programmable ADC configuration register; no A/D conversion will be enabled if this register is not set from last power-up sequence.

This ADC can be used to measure some external pins as well as some L6460's internal voltages. The converter is based on a cyclic architecture with an internal sample-and-hold circuit. Sample time can be changed using serial interface to enable good measure of higher impedance sources.

Figure 24. A2D block diagram

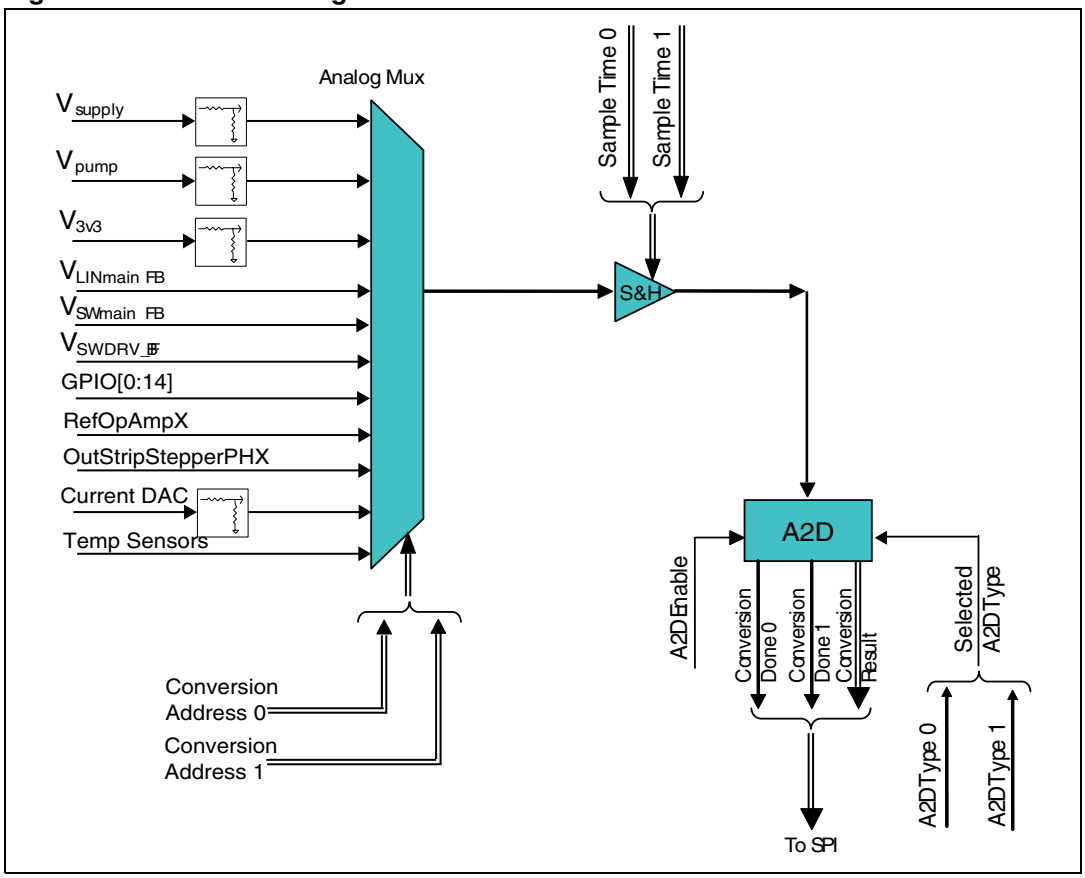

The A2D system is enabled by setting the A2DEnable bit to '1' in the A2DControl register.

The A2DType bit in the A2DConfigX registers selects the A2D active configuration (8-bit resolution or 9-bit) according to the *Table 30*.

Table 30. ADC truth table

A2DEnable	A2DType	A2D operation
0	X	Disabled
1	0	ADC working as a 8-bit ADC
1	1	ADC working as a 9-bit ADC

The multiplexer channel to be converted can be chosen by writing the A2DChannel1[4:0] or A2DChannel2[4:0] bits in the A2DConfigX register; the channel addresses table is reported in the *Table 31*.

Table 31. Channel addresses

A2DChannelX[4:0] (bin.)	Converted channel	Note
00000	V_{Supply} scaled	See voltage divider specification.
00001	$V_{SupplyInt}$ scaled	See voltage divider specification.
00010	$V_{ref\_2\_5V}$	
00011	Temp Sensor1	Temperature sensor1
00100	Temp Sensor2	Temperature sensor2
00101	V_{3v3} scaled	See voltage divider specification.
0011X	Not used	
01000	Not used	
01001	GPIO[0]	
01010	GPIO[1]	
01011	GPIO[2]	
01100	GPIO[3]	
01101	GPIO[4]	
01110	GPIO[5]	
01111	GPIO[6]	
10000	GPIO[7]	
10001	GPIO[8] clamp	See current DAC circuit
10010	GPIO[9]	
10011	GPIO[10]	
10100	GPIO[11]	
10101	GPIO[12]	
10110	GPIO[13]	
10111	GPIO[14]	
11000	MuxRefOpAmp1	
11001	MuxRefOpAmp2	
11010	OutStripStepperPhA	
11011	OutStripStepperPhB	
11100	Not used	
11101	ST reserved	References AUX1 switching reg.
11110	ST reserved	0.8V reference voltage
11111	ST reserved	1.65V reference voltage

The sample time can be changed by modifying the A2DSampleX[2:0] bits in the A2DConfigX register; depending on which is the A2DType bit, the available sample times are reported in *Table 32* and *Table 33*.

Table 32. ADC sample times when working as a 8-bit ADC

A2DSampleX[2:0] (binary)	Sample time	
	Typ	Unit
000	$16*T_{osc}$	µs
001	$32*T_{osc}$	µs
010	$64*T_{osc}$	µs
011	$128*T_{osc}$	µs
100	$256*T_{osc}$	µs
101	$512*T_{osc}$	µs
110	$1024*T_{osc}$	µs
111	$2048*T_{osc}$	µs

Table 33. ADC sample time when working as a 9-bit ADC

A2DSampleX[2:0] (binary)	Sample time	
	Typ	Unit
000	$32*T_{osc}$	µs
001	$64*T_{osc}$	µs
010	$128*T_{osc}$	µs
011	$256*T_{osc}$	µs
100	$512*T_{osc}$	µs
101	$1024*T_{osc}$	µs
110	$2048*T_{osc}$	µs
111	$4096*T_{osc}$	µs

A conversion on channel 1 can be triggered by writing a logic ‘1’ in the A2DTrig1 bit in the A2DConfigX register and a conversion on channel 2 can be triggered writing a logic ‘1’ in the A2DTrig2 bit in the same register. While a request on a channel is pending but not yet completed L6460 will force to logic ‘0’ the corresponding A2DdoneX bit in the A2DResultX registers and L6460 will not accept other conversion request on that channel.

Continuous conversion on one channel can be accomplished by setting to logic ‘1’ the A2DcontinuousX bit in the A2DConfigX register. When A2DcontinuousX bit is set, other conversions can be accomplished on the other channel; these conversions will be inserted between two conversions of the other channel and the end of the conversion will be signaled using A2DdoneX bit. Of course when a channel is in continuous mode its sample time and channel address cannot be changed.

Continuous conversions on both 2 channels can be also accomplished by setting to logic ‘1’ the A2Dcontinuous1 and A2Dcontinuous2 bits; the conversions are made in sequence.

15.1 Voltage divider specifications

As can be seen in the A2D block diagram, in order to report some voltages in the A2D working range, they are scaled with a resistor divider before the conversion.

Here below are reported the resistor voltage divider specifications:

Table 34. Voltage divider specification

Parameter	Description	Notes	Min	Typ	Max	Unit
R_{Supply_ratio}	V_{Supply} divider ratio		-	1/15	-	
$R_{SupplyInt\_ratio}$	$V_{Supply\ Int}$ divider ratio		-	1/15	-	
R_{V3V3_ratio}	V_{3v3} divider ratio		-	1/2	-	

16 Current DAC circuit

L6460 includes a multiple range 6-bit current sink DAC. The LSB value of this DAC can be selected using the DacRange[1:0] bits in the CurrDacCtrl register.

The output of this circuit is connected to GPIO[8] that is a 5 V tolerant pin. The value of this pin can be converted using ADC. The pin value can be scaled before being converted by enabling the internal resistor divider connected to this pin. If the current sunk by resistor divider is not acceptable the pin voltage can be converted without scaling its value. When the conversion without scaling resistor is chosen a clamping connection is used to avoid voltage compatibility of the pin to the ADC system. The clamping circuit will sink a typical current of half microampere from the pin during the sampling time.

Figure 25. Current DAC block diagram

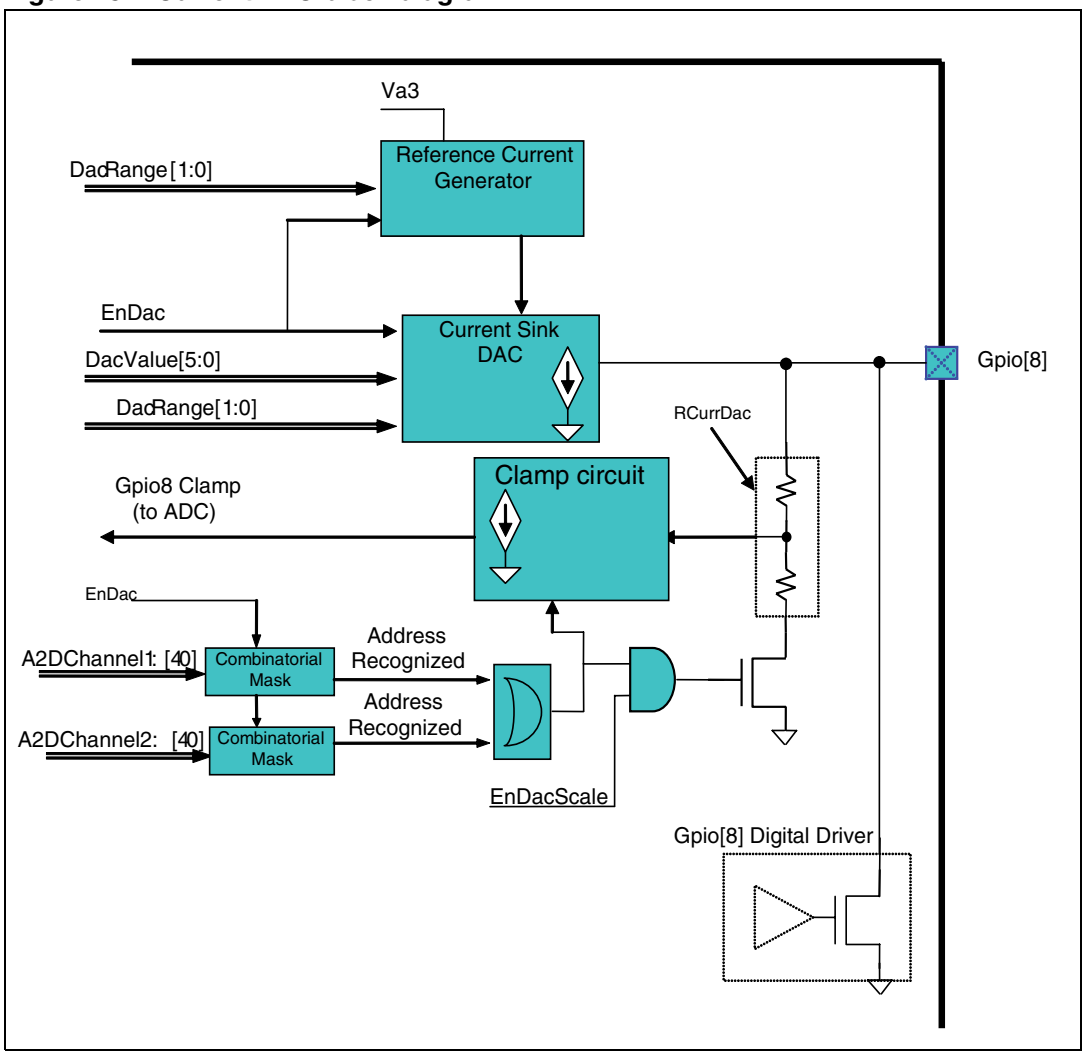

The circuit is enabled by setting to logic ‘1’ the EnDac bit in the CurrDacCtrl register then the desired sunk current value is chosen by changing the value of the DacValue[5:0] bits in the same register being DacValue[0] the least significant bit and DacValue[5] the most significant bit.

The current DAC has three possible current ranges that can be selected using the DacRange[1:0] bits in the CurrDacCtrl register. The DAC range selection table is shown in *Table 35*.

Table 35. Current DAC truth table

DacRange[1]	DacRange[0]	LSB typical current I_{LSB} typ	Full scale typical current I_{FULL} typ
0	0	Disabled	Disabled
0	1	10 µA	0.63 mA
1	0	100 µA	6.3 mA
1	1	1 mA	63 mA

By changing LSB current value, all steps will change following this relation:

$$I_{step}(N) = N * I_{LSB}$$

where N is the value of DacValue[5:0] bits.

17 Operational amplifiers

L6460 contains two rail to rail output, high bandwidth internally compensated operational amplifiers supplied by V_{GPIO_SPI} pin. The operative supply range is 3.3 V ± 4.5%

Each operational amplifier can have all pin accessible or, to save pins, can be internally configured as a buffer. They can also be used as comparators; to do that the user must disable internal compensation by writing a logic level “1” in the OpXCompMode bit in the OpAmpXCtrl register.

in *Figure 26* are reported the block diagrams of the two operational amplifiers.

Figure 26. Configurable 3.3 V operational amplifiers

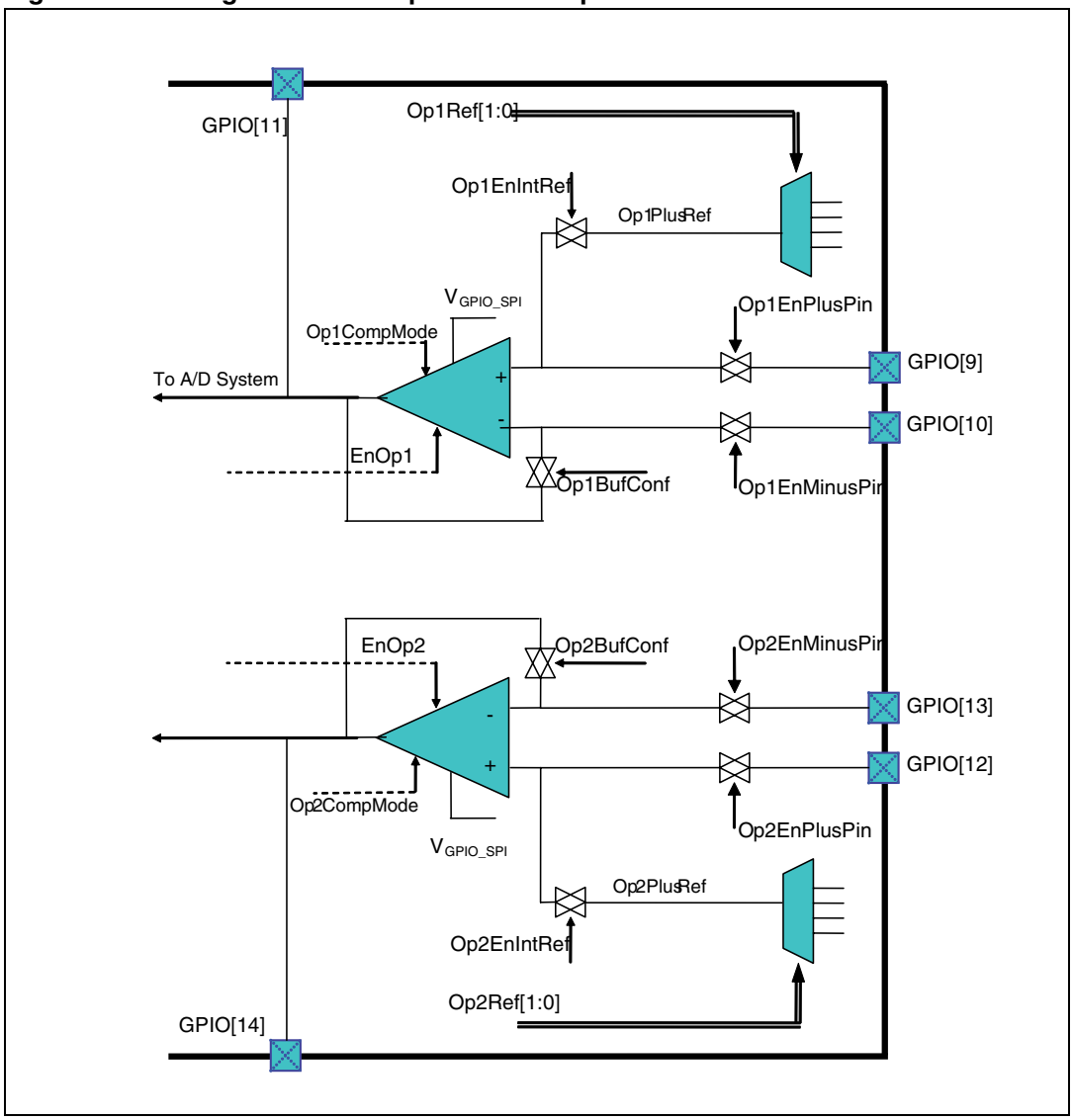

Note: Op1EnPlusRef and Op2EnPlusRef cannot be used to drive external pin so the user must be sure not to enable the path between one of these voltage references and the external pin.

The operational amplifiers are capable to drive a capacitive load in buffer configuration up to a maximum of 100 pF; for higher capacitance it is necessary to add resistive loads to increase the OP output current, and/or to add a low resistor (10 Ω) in series to the load capacitance.

To use the operational amplifiers as comparators the user must disable internal compensation writing a logic one in the OpXDisComp bit in the OpAmpXCtrl register.

18 Low voltage power switches

Low voltage power switches are analog switches designed to operate from a single +2.4 V to +3.6 V V_{GPIO_SPI} supply. They are intended to provide and remove power supply to low voltage devices. When switched on, they connect the V_{GPIO_SPI} pin to their output pin (GPIO[6] for low voltage power switch 1 or GPIO[7] for low voltage power switch 2) thus powering the device connected to it. The turning on and off of each switch can be controlled through serial interface.

L6460 provides 2 low voltage power switches, each of them has current limitation to minimum 150mA to limit inrush current when charging a capacitive load. When the limit current has been reached, for more than a T_{filter} time, then a flag is activated; this flag is latched in the central logic and can be cleared by the firmware. Please note that, in case of capacitive load, the current limit is reached the first time the low power switch is turned on: therefore the user will find a limit flag that must be cleared.

The 2 low voltage power switches can be externally paralleled to obtain a single super low voltage power switch. Low voltage pass switches sink current needed for their functionality from pin V_{GPIO_SPI}, they never inject current on this pin.

Figure 27. Low power switch block diagram

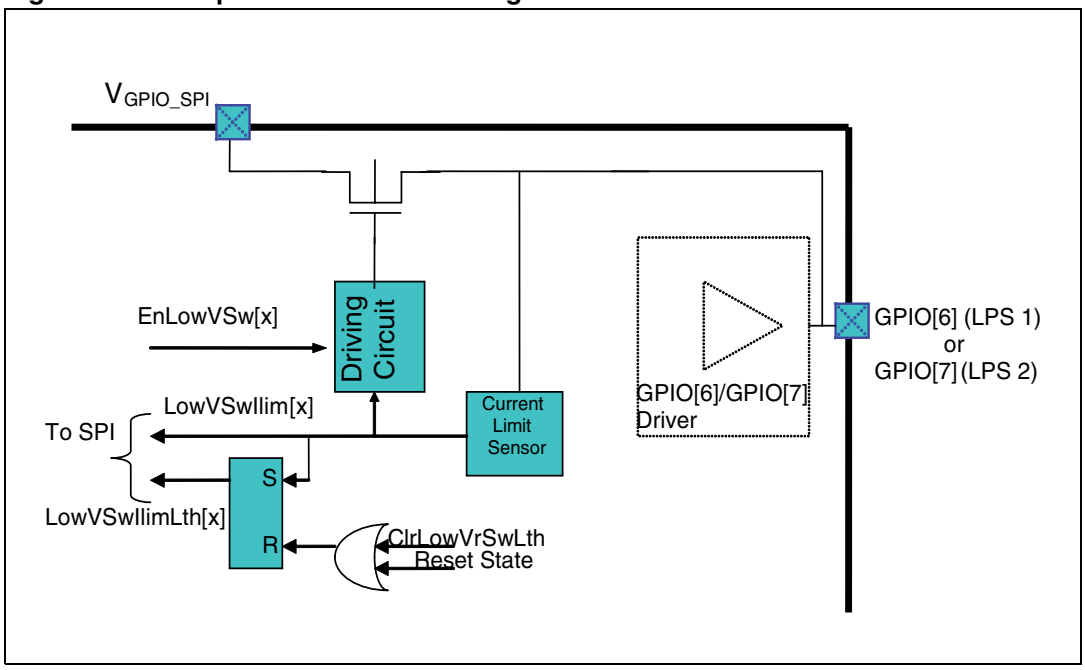

19 General purpose PWM

L6460 includes three general purpose PWM generators that can be redirected on GPIO pins (see *Chapter 22*). Two of these generators (Aux_PWM_1 and Aux_PWM_2) work with a fixed period $F_{OSC}/512$ and have a programmable duty cycle; the other one (GP_PWM) has a programmable base time clock and a programmable time for both high and low levels.

19.1 General purpose PWM generators 1 and 2 (AuxPwm1 and AuxPwm2)

The Duty cycle of these PWM generators can be changed by writing the AuxPwmXCtrl bits (where X can be 1 or 2) in the AuxPwm1Ctrl and AuxPwm2Ctrl registers. Their positive duty cycle will change according to the equation:

$$\text{PWM\_X\_DUTY} = \text{AuxPwmXCtrl}[9:0]/512$$

According to this equation a programmed “0” value will cause a 0% duty cycle (output always at logic level 0).

19.2 Programmable PWM generator (GpPwm)

GpPWM has a programmable base clock that can be changed by programming the GpPwmBase[6:0] bits in the GpPwmBase register. The clock will change according to the equation:

$$\text{PWM\_BASE\_PERIOD} = (\text{GpPwmBase}[6:0] + 1) \times Tosc$$

The high and low level duration (expressed in base clock periods), can be programmed writing the GpPwmHigh[7:0] and GpPwmLow[7:0] bits in the GpPwmCtrl register so they will change according to following equations:

$$High\_level\_Time = \text{GpPwmHigh}[7:0] \times \text{PWM\_BASE\_PERIOD}$$

$$Low\_level\_Time = \text{GpPwmLow}[7:0] \times \text{PWM\_BASE\_PERIOD}$$

The resulting period of the PWM will be:

$$Period = (\text{GpPwmHigh}[7:0] + \text{GpPwmLow}[7:0]) + \text{PWM\_BASE\_PERIOD}$$

and the positive duty cycle will result:

$$DutyCycle = \frac{High\_level\_Time}{High\_level\_Time + Low\_level\_Time} = \frac{\text{GpPwmHigh}[7:0]}{\text{GpPwmHigh}[7:0] + \text{GpPwmLow}[7:0]}$$

A programmed value of 0 in GpPwmHigh[7:0] and GpPwmLow[7:0] bits will force the PWM generator output to be always at logic level “0”.

20 Interrupt controller

L6460 contains one programmable interrupt controller that can be used to advice the firmware, through the serial interface, when a certain event happens inside the IC. The output of the interrupt circuit can be also redirected on a GPIO pin therefore the event can be signaled directly to the external circuits.

Figure 28. Interrupt controller diagram

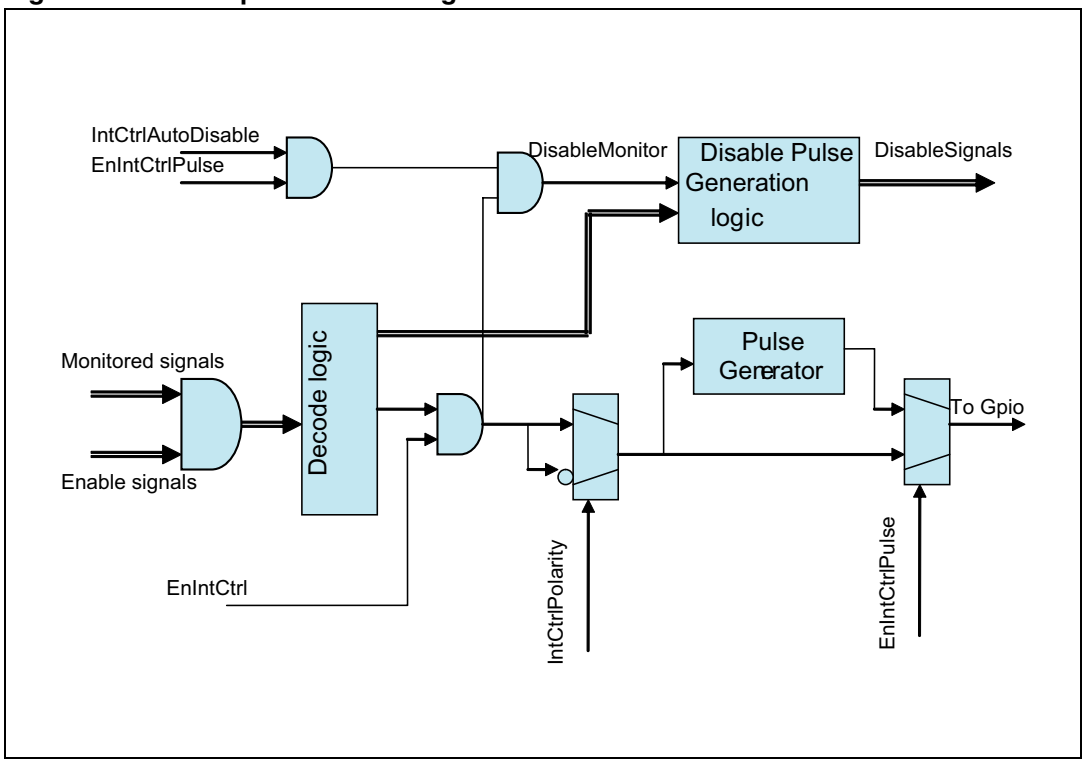

The *Table 36* contains the events that can be monitored by the interrupt controller.

Table 36. Interrupt controller event

Event	Event description	Notes
Mtr1Fault	Bridge 1 fault (Ilimit event)	
Mtr2Fault	Bridge 2 fault (Ilimit event)	
Mtr3Fault	Bridge 3 fault (Ilimit event)	
Mtr4Fault	Bridge 4 fault (Ilimit event)	
nAWAKE	nAWAKE pin low	
SwRegCtrl Ilimit	Switching regulator controller Ilimit event.	
VMainSW Ilimit	Main switching regulator Ilimit event.	
LowPowSw 1	Low voltage power switch 1 Ilimit event.	
LowPowSw 2	Low voltage power switch 2 Ilimit event	
Warm	Warming event	

Table 36. Interrupt controller event (continued)

Event	Event description	Notes
WDWarn	Watch dog warning event	
WD	Watch dog event	
DigCmp	Digital comparator	
ADCDone1	ADC conversion done 1	(1)
ADCDone2	ADC conversion done 2	(1)
Vloop1Ilim	AUX1 Ilimit event.	

1. This event is disabled if the related ADC channel is configured in continuous mode.

Any event detection can be enabled and disabled by setting at logic level 1 the relative enable bit in the interrupt controller configuration register (IntCrtlCfg).

The interrupt controller can be programmed to give a pulse when a monitored event happens or to continuously maintaining the output active until the interrupt condition is finished.

When programmed to signal the enabled events by giving pulses, the interrupt controller can be configured to disable the event that caused the interrupt request until the firmware re-enables it writing the relative bit in the control register (IntCrtlCtrl) or to continue to monitor the event.

The GPIO output of this circuit can be programmed to be active high or active low.

21 Digital comparator

L6460 includes one digital comparator that can be used to signal, through serial interface, that a channel converted by the ADC is greater, greater-equal, lesser, lesser equal, or equal than a fixed value set by serial interface or than the value converted by the other ADC channel.

This circuit can be used to monitor the temperature of the IC advising the firmware when it reaches a certain value decided by the firmware by setting one ADC channel to do continuous conversions of the temperature sensor.

The circuit operation can be enabled or disabled changing the EnDigCmp bit in the configuration register DigCmpCfg. By setting the DigCmpUpdate[1:0] bits in the configuration register, the comparator can be programmed to update its output in one of the following ways:

- DigCmpUpdate[1:0]=00
  - Continuously (each clock).
- DigCmpUpdate[1:0]=01
  - Each time a conversion is performed on ADC channel 0.
- DigCmpUpdate[1:0]=10
  - Each time a conversion is performed on ADC channel 1.
- DigCmpUpdate[1:0]=11
  - ADC state machine driven.

When the last option is selected, the digital comparator will update its output in two different ways depending on the configuration of the ADC converter. If ADC converter is configured to do continuous conversions on both channels, the output of the comparator will be updated when the double conversion is completed. If ADC converter is not configured to do continuous conversions on both channels, the output of the comparator will be updated each time a conversion is completed.

The comparator output can be digitally filtered so that the programmed condition has to be found for three consecutive checks before to be signaled.

The *Figure 29* shows the block diagram of digital comparator.

Figure 29. Digital comparator block diagram

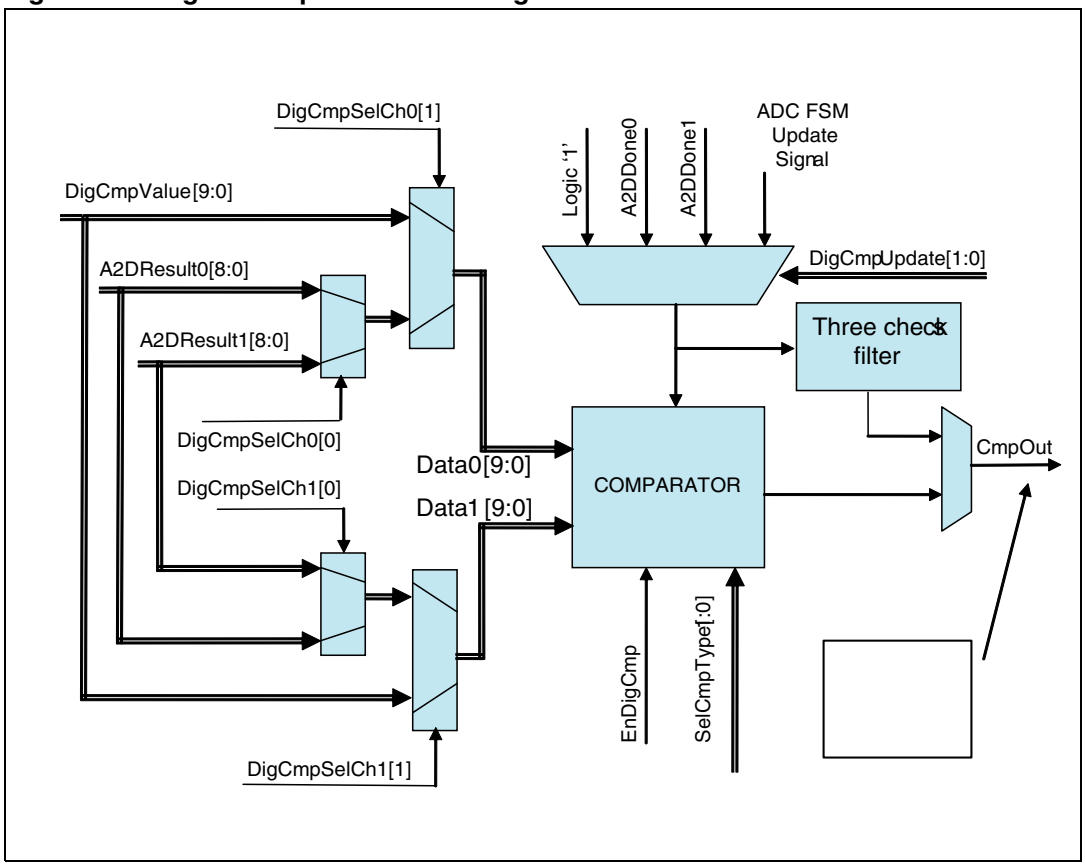

In *Table 37* is reported the comparison type truth table.

Table 37. Comparison type truth table

EnDigCmp	SelCmpType[1]	SelCmpType[0]	Comparison type
0	X	X	Disabled
1	0	0	Data0[9:0] ≤131÷Data1[9:0]
1	0	1	Data0[9:0] = Data1[9:0]
1	1	0	Data0[9:0] > Data1[9:0]
1	1	1	Data0[9:0] ≤= Data1[9:0]

In *Table 38* is reported the Data0/Data1 selection truth table.

Table 38. DataX selection truth table

DigCmpSelChX[1]	DigCmpSelChX[0]	DataX[9:0]
0	X	DigCmpValue[9:0]
1	0	A2DResult1[8:0]
1	1	A2DResult1[8:0]

22 GPIO pins

Some of the pins of L6460 are indicated as GPIO (General purpose I/O). These pins can be configured to be used in different ways depending on customer application. All GPIOs can be used as digital input/output pins with digital value settable/readable using serial interface or as analog input pins that can be converted using the A2D system. Some of the pins can be used for special purposes: i.e. two of them can be used to access to the pass switch function, other two are used as feedback pins for the auxiliary synchronous switching regulators.

All input Schmitt triggers and output circuitry used for start-up purposes are powered by the internally generated V_{3v3}, while the digital output buffers are powered by V_{GPIO_SPI} pin. To ensure independency between V_{3v3} and V_{GPIO_SPI} the GPIOs output drivers are open-drain driver or the high side MOS is in back-to-back configuration to avoid the presence of the body diode between output and supply.

All digital output signals can be inverted before being provided on the relative GPIO pins.

Here below is reported the table with GPIO functions.

Table 39. GPIO functions description

Pin Name	Function(1)					Notes
	Input		Output		Special	
	Analog	Digital	Analog	Digital		
GPIO[0]	- ADC input	- SPI IN		- SPI OUT - Interrupt ctrl. - AuxPwm1 - AuxPwm2	Start-up configuration pin	Open drain output
GPIO[1]	- ADC input - Comp1 In- - Vaux1 F.B.	- SPI IN		- SPI OUT - Interrupt ctrl. - AuxPwm1 - AuxPwm2		Open drain output
GPIO[2]	- ADC input - Comp2 In- - Vaux2 F.B.	- SPI IN - IN PWM		- SPI OUT - Interrupt ctrl. - AuxPwm2 - AuxPwm3		Open drain output
GPIO[3]	- ADC input	- SPI IN		- SPI OUT - AuxPwm2 - AuxGpPwm3	Start-up configuration pin	Open drain output
GPIO[4]	- ADC input	- SPI IN		- SPI OUT - Interrupt ctrl. - AuxPwm1 - AuxPwm3	Start-up configuration pin	Open drain output
GPIO[5]	- ADC input	- SPI IN		- SPI OUT - Reg. loop 1 - Comp1 out - AuxPwm3	Slave Control	Full driver BB powered by V_{3v3}

Table 39. GPIO functions description (continued)

Pin Name	Function[1]					Notes
	Input		Output		Special	
	Analog	Digital	Analog	Digital		
GPIO[6]	- ADC input	- SPI IN	- Low Pow Sw 1	- SPI OUT - A2DGpo - AuxPwm2 - Comp2 out		Full driver connected to V_{GPIO_SPI}
GPIO[7]	- ADC input	- SPI IN	- Low Pow Sw 2	- SPI OUT - AuxPwm1 - AuxPwm3 - Comp1 out		Full driver connected to V_{GPIO_SPI}
GPIO[8]	- ADC input	- SPI IN[2]	- CurrDAC	- SPI OUT - AuxPwm1 - AuxPwm3 - Comp2 out	5 volt input tolerant	Open drain output
GPIO[9]	- ADC input - OpAmp1 in+	- SPI IN - ID 1 - IN PWM		- SPI OUT - Interrupt contr. - AuxPwm1 - Reg. loop 3		Full driver connected to V_{GPIO_SPI}
GPIO[10]	- ADC input - OpAmp1 in-	- SPI IN - ID 2 - IN PWM		- SPI OUT - Interrupt ctrl. - AuxPwm2 - AuxPwm3		Full driver connected to V_{GPIO_SPI}
GPIO[11]	- ADC input	- SPI IN - IN PWM	- OpAmp1 Out	- SPI OUT - A2DGpo - AuxPwm1 - AuxPwm2		Full driver connected to V_{GPIO_SPI}
GPIO[12]	- ADC input - OpAmp2 in+	- SPI IN - STEP_REQ		- SPI OUT - Interrupt ctrl - Comp2 out - Reg. loop 2		Full driver BB (can be powered by V_{3v3} with a metal change)
GPIO[13]	- ADC input - OpAmp2 in-	- SPI IN		- SPI OUT - AuxPwm1 - Reg. loop 3 - AuxPwm3		Full driver connected to V_{GPIO_SPI}
GPIO[14]	- ADC input	- SPI IN	- OpAmp2 Out	- SPI OUT - Interrupt ctrl. - AuxPwm2 - AuxPwm3		Full driver connected to V_{GPIO_SPI}

1. In this table are used the abbreviations of the following In *Table 40*.
2. GPIO[8] input Schmitt trigger is disabled by default (after a reset) to be able to read the digital value from this pin it needs to be enabled writing a logic '1' in the EnGpio8DigIn in CurrDacCtrl register.

Table 40. Abbreviations

Abbreviation	Meaning
ADC input	Input to the ADC system.
SPI IN	Digital state of this pin is readable through SPI.
SPI OUT	Digital state of this pin can be set through SPI.
BB	Back to back high side driver.
Comp1 IN -	This pin can be used as minus input for comparator 1.
Comp2 IN -	This pin can be used as minus input for comparator 2.
Vaux1 FB	This pin can be used as feedback input for AUX1 regulator obtained by using bridge 3.
A2DGpo	This pin can be used to carry out the A2DGpo value related to the ADC conversion L6460 is doing.
Reg. Loop 3	This pin can be used as output of the regulation loop used by AUX3 regulator obtained by using bridge 4.
STEP_REQ	This pin can be used to request a stepper sequencer evolution step.
Interrupt Ctrl	This pin can be used to carry out the interrupt controller circuit output.
Vaux2 FB	This pin can be used as feedback pin by AUX2 regulator obtained by using bridge 3
IN PWM	This pin can be used to provide an external PWM to bridges.
Reg. Loop 1	This pin can be used as output of the regulation loop used by AUX1 regulator.
Comp1 OUT	This pin can be used as output of the comparator 1.
AuxPwm1	This pin can be used to carry out the PWM generated by AuxPwm1 circuit.
Low Volt. Pow. Sw. 1	This pin can be used as output of low voltage power switch 1.
Reg. Loop 2	This pin can be used as output of the regulation loop used by AUX2 regulator.
Comp2 OUT	This pin can be used as output of the comparator 2.
AuxPwm2	This pin can be used to carry out the PWM generated by AuxPwm2 circuit.
Low Volt. Pow. Sw. 2	This pin can be used as output of low voltage power switch 2.
Reg. Loop 3	This pin can be used as output of the regulation loop used by AUX3 regulator.
AuxPwm3	This pin can be used to carry out the PWM generated by AuxPwm3 circuit.
CurrDAC	This pin can be used to carry out the output of the current DAC circuit.
AuxPwm4	This pin can be used to carry out the PWM generated by AuxPwm4 circuit.
OpAmp1 in+	This pin can be used as operational amplifier 1 non-inverting input.
OpAmp1 in-	This pin can be used as operational amplifier 1 inverting input.
OpAmp1 Out	This pin can be used as operational amplifier 1 output.
OpAmp2 in+	This pin can be used as operational amplifier 2 non-inverting input.
OpAmp2 in-	This pin can be used as operational amplifier 2 inverting input.

Table 40. Abbreviations (continued)

Abbreviation	Meaning
OpAmp2 Out	This pin can be used as operational amplifier 2 output.
ID 1	This pin is used to determine the SPI ID1 bit value.
ID 2	This pin is used to determine the SPI ID2 bit value.
Slave Control	This pin is used as slave control when the IC is configured as master.

Hereafter are reported the detailed specifications for each GPIO.

To enable the functionality of the GPIO as output pin, the relative GpioOutEnable[14:0] bit must be enabled in GpioOutEnable register.

Each GPIO could be configured by setting the appropriate GpioXMode[2:0] in the GpioCtrlX register.

22.1 GPIO[0]

The GPIO[0] truth table is (for the abbreviation list please refer to *Table 40*).

Table 41. GPIO[0] truth table

State at StartUp	GPIO[0] SPI BITS				Function	Note
	GpioOut Enable [0]	Mode[2]	Mode[1]	Mode[0]		
1	X	X	X	X	Detection of StartUp config	See *Chapter 8*
0	0	X	X	X	HiZ (SPI_IN)	
0	1	0	0	0	SPI OUT	(1)
0	1	0	0	1	InterruptCtrl	(1)
0	1	0	1	0	AuxPwm1	(1)
0	1	0	1	1	AuxPwm2	(1)
0	1	1	0	0	SPI OUT inverted	(1)
0	1	1	0	1	InterruptCtrl inverted	(1)
0	1	1	1	0	AuxPwm1 inverted	(1)
0	1	1	1	1	AuxPwm2 inverted	(1)

1. In all configurations in which GPIO[0] is enabled as output:
   a) the GPIO[0] pin can be always used as an analog input to the ADC system (ADC function) by writing its address in the A2DChannelX[4:0] in the A2DConfigX register and starting a conversion;
   b) the GPIO[0] pin can be always used as a digital input so its value can be always read through SPI interface (SPI_IN function);
   c) the GPIO[0] pin is an open drain output.

Figure 30. GPIO[0] block diagram

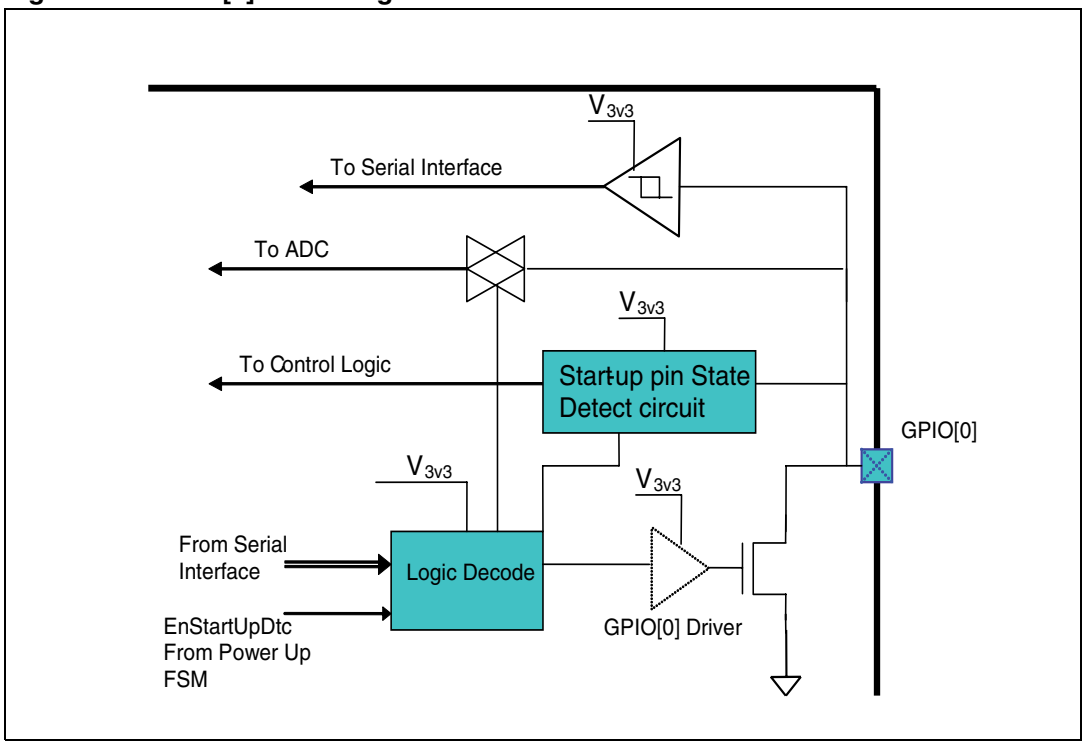

22.2 GPIO[1]

The GPIO[1] truth table is (for the abbreviation list please refer to *Table 40*).

Table 42. GPIO[1] truth table

AUX1Enable or AUX1System	GPIO[1] SPI BITS				Function	Note
	GpioOut Enable [1]	Mode[2]	Mode[1]	Mode[0]		
1	X	X	X	X	AUX1 FB	(1)
0	0	0	X	X	HiZ (SPI_IN)	
0	0	1	X	X	Comp1 IN -	(2)
0	1	0	0	0	SPI OUT	(2)
0	1	0	0	1	AuxPwm1	(2)
0	1	0	1	0	AuxPwm2	(2)
0	1	0	1	1	InterruptCtrl	(2)
0	1	1	0	0	SPI OUT inverted	(2)
0	1	1	0	1	AuxPwm1 inverted	(2)
0	1	1	1	0	AuxPwm2inverted	(2)
0	1	1	1	1	IntCtrlinverted	(2)

1. AUX1Enable or AUX1System bit =1 represent the case in which AUX1 is used as a system or not system regulator.
2. In all configurations in which GPIO[1] is enabled as output:
   a) the GPIO[1] pin can be always used as an analog input to the ADC system (ADC function) by writing its address in the A2DChannelX[4:0] in the A2DConfigX register and starting a conversion;
   b) the GPIO[1] pin can be always used as a digital input so its value can be always read through SPI interface (SPI_IN function);
   c) the GPIO[1] pin is an open drain output.

Figure 31. GPIO[1] block diagram

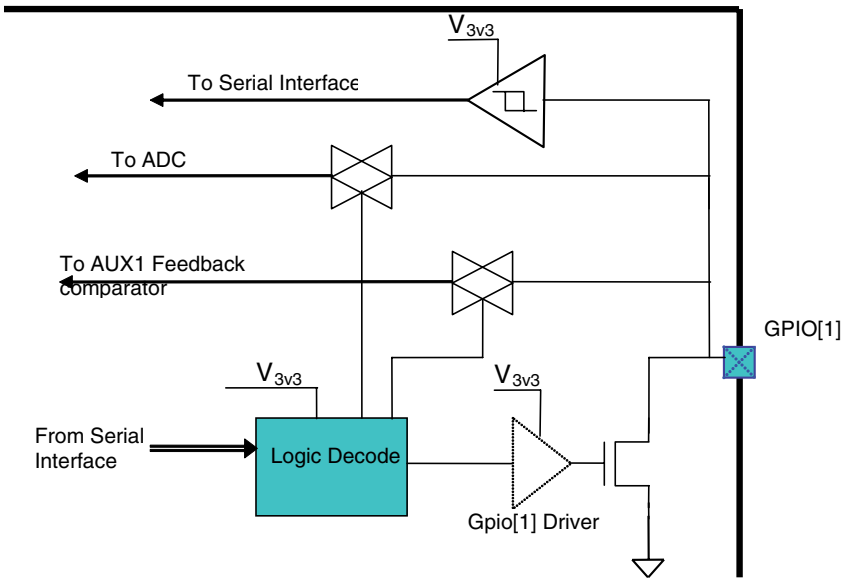

22.3 GPIO[2]

The GPIO[2] truth table is (for the abbreviation list please refer to *Table 40*).

Table 43. GPIO[2] truth table

AUX2Enable or AUX2System	GPIO[1] SPI BITS				Function	Note
	GpioOut Enable [1]	Mode[2]	Mode[1]	Mode[0]		
1	X	X	X	X	AUX2 FB	(1)
0	0	0	X	X	HiZ (SPI_IN)	
0	0	1	X	X	Comp1 IN -	(2)
0	1	0	0	0	SPI OUT	(2)
0	1	0	0	1	AuxPwm2	(2)
0	1	0	1	0	AuxPwm3	(2)
0	1	0	1	1	InterruptCtrl	(2)
0	1	1	0	0	SPI OUT inverted	(2)
0	1	1	0	1	AuxPwm2 inverted	(2)
0	1	1	1	0	AuxPwm3 inverted	(2)
0	1	1	1	1	IntCtrlinverted	(2)

1. AUX2Enable or AUX2System bit =1 represent the case in which AUX1 is used as a System or Not System regulator.
2. In all configurations in which GPIO[2] is enabled as output:
   a) the GPIO[2] pin can be always used as an analog input to the ADC system (ADC function) by writing its address in the A2DChannelX[4:0] in the A2DConfigX register and starting a conversion;
   b) the GPIO[2] pin can be always used as a digital input so its value can be always read through SPI interface (SPI_IN function);
   c) please note that GPIO[2] output is directly connected to ExtPWM3 input for Bridge 3 or 4 and therefore particular care must be taken in order to avoid wrong PWM signals when ExtPWM3 is selected for bridge 3 or 4;
   d) the GPIO[2] pin is an open drain output.

Figure 32. GPIO[2] block diagram

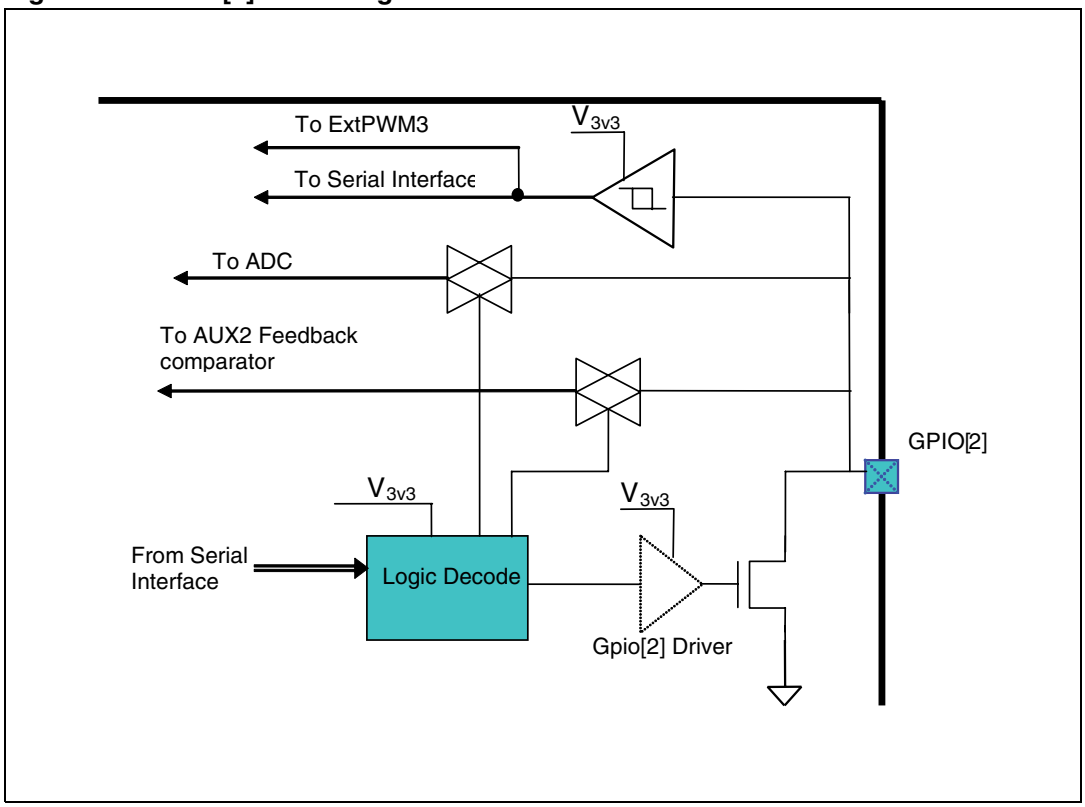

22.4 GPIO[3]

The GPIO[3] truth table is (for the abbreviation list please refer to *Table 40*).

Table 44. GPIO[3] truth table

State at StartUp	GPIO[3] SPI BITS				Function	Note
	GpioOut Enable [3]	Mode[2]	Mode[1]	Mode[0]		
1	X	X	X	X	Detection of StartUp config	See *Chapter 8*
0	0	X	X	X	HiZ (SPI_IN)	
0	1	0	0	0	SPI OUT	(1)
0	1	0	0	1	AuxPwm1	(1)
0	1	0	1	0	AuxPwm2	(1)
0	1	0	1	1	AuxPwm2	(1)
0	1	1	0	0	SPI OUT inverted	(1)
0	1	1	0	1	AuxPwm1 inverted	(1)
0	1	1	1	0	AuxPwm2 inverted	(1)
0	1	1	1	1	AuxPwm3 inverted	(1)

1. In all configurations in which GPIO[3] is enabled as output:
   a) the GPIO[3] pin can be always used as an analog input to the ADC system (ADC function) by writing its address in the A2DChannelX[4:0] in the A2DConfigX register and starting a conversion;
   b) the GPIO[3] pin can be always used as a digital input so its value can be always read through SPI interface (SPI_IN function);
   c) the GPIO[3] pin is an open drain output.

Figure 33. GPIO[3] block diagram

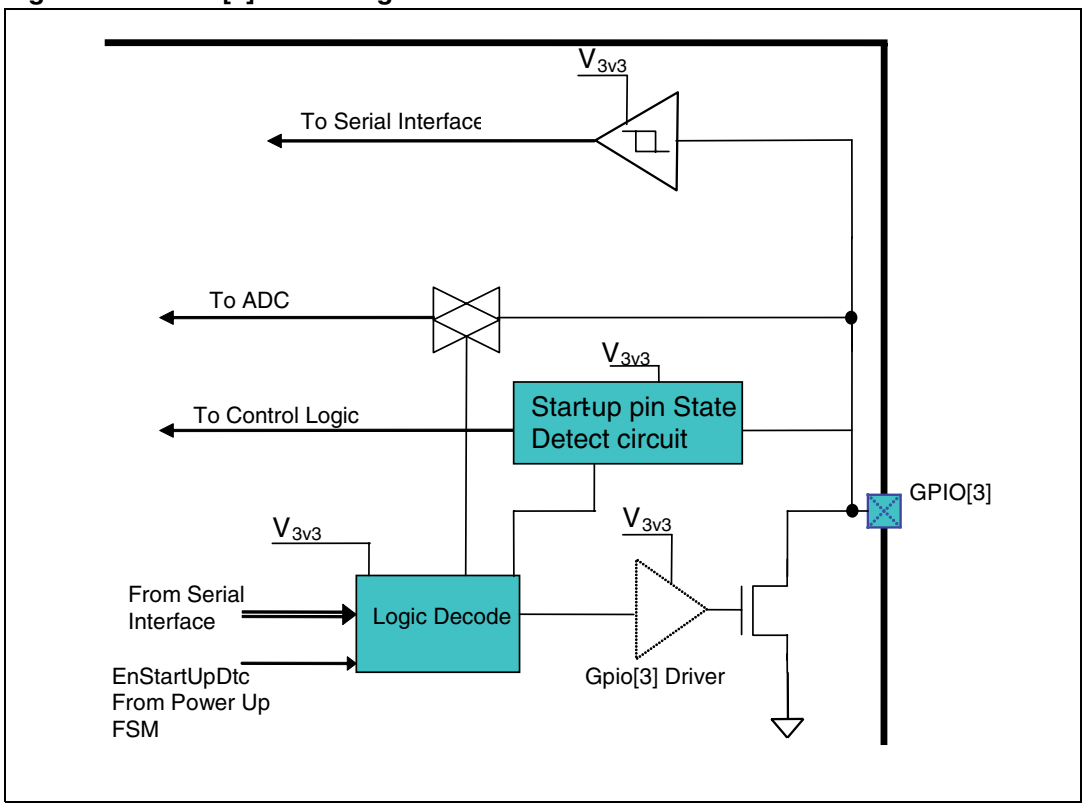

22.5 GPIO[4]

The GPIO[4] truth table is (for the abbreviation list please refer to *Table 40*).

Table 45. GPIO[4] truth table

State at StartUp	GPIO[4] SPI BITS				Function	Note
	GpioOut Enable [4]	Mode[2]	Mode[1]	Mode[0]		
1	X	X	X	X	Detection of StartUp config	See *Chapter 8*
0	0	X	X	X	HiZ (SPI_IN)	
0	1	0	0	0	SPI OUT	(1)
0	1	0	0	1	Interrupt Ctrl	(1)
0	1	0	1	0	AuxPwm1	(1)
0	1	0	1	1	AuxPwm3	(1)
0	1	1	0	0	SPI OUT inverted	(1)
0	1	1	0	1	Interrupt Ctrl	(1)
0	1	1	1	0	AuxPwm1 inverted	(1)
0	1	1	1	1	AuxPwm3 inverted	(1)

1. In all configurations in which GPIO[4] is enabled as output:
   a) the GPIO[4] pin can be always used as an analog input to the ADC system (ADC function) by writing its address in the A2DChannelX[4:0] in the A2DConfigX register and starting a conversion;
   b) the GPIO[4] pin can be always used as a digital input so its value can be always read through SPI interface (SPI_IN function);
   c) the GPIO[4] pin is an open drain output.

Figure 34. GPIO[4] block diagram

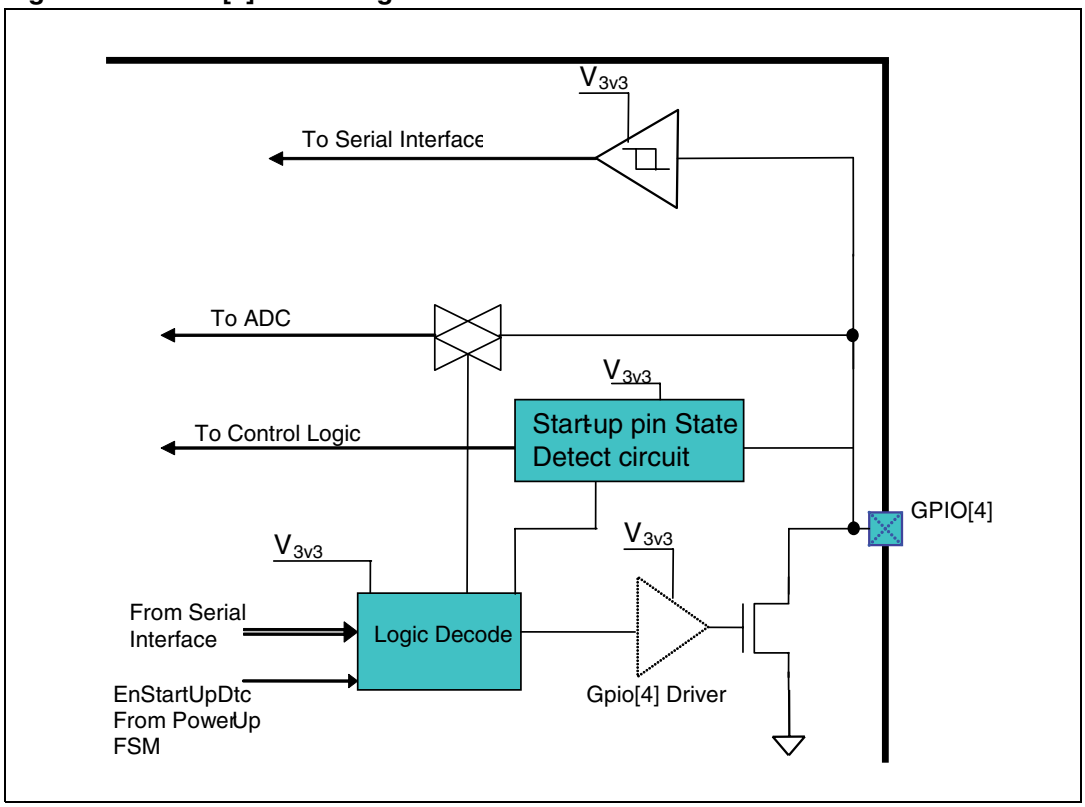

22.6 GPIO[5]

The GPIO[5] truth table is (for the abbreviation list please refer to *Table 40*).

Table 46. GPIO[5] truth table

Master(1)	AUX1 system and Vloop1 external(2)	GPIO[5] SPI BITS				Function	Note
		GpioOut enable[5]	Mode[2]	Mode[1]	Mode[0]		
1	X	X	X	X	X	Slave control	
0	1	X	X	X	X	Reg Loop1 OUT	(3)
0	0	0	X	X	X	HiZ (SPI_IN)	
0	0	1	0	0	0	SPI OUT	(3)
0	0	1	0	0	1	Comp1OUT	(3)
0	0	1	0	1	0	Reg Loop1 OUT	(3)
0	0	1	0	1	1	AuxPwm3	(3)
0	0	1	1	0	0	SPI OUT inverted	(3)
0	0	1	1	0	1	Comp1OUT inverted	(3)
0	0	1	1	1	0	Reg Loop1 OUT inverted	(3)
0	0	1	1	1	1	AuxPwm3 inverted	(3)

1. Master bit is at logic level “1” when L6460 is used as a master device (see *Chapter 8*)
2. This bit is at logic level “1” if AUX1 regulator is a system regulator but its power stage is externally realized (and therefore the regulation loop is not used to drive bridge 3). In this case Vloop1IsSys bit will be at logic level “1”, while Vloop1OnMtr3SideA and Vloop1OnMtr3SideB bits will be at logic level “0” in CoreConfigReg register.
3. In all configurations in which GPIO[5] is enabled as output:
   a) the GPIO[5] pin can be always used as an analog input to the ADC system (ADC function) by writing its address in the A2DChannelX[4:0] in the A2DConfigX register and starting a conversion;
   b) the GPIO[5] pin can be always used as a digital input so its value can be always read through SPI interface (SPI_IN function);
   c) the GPIO[5] pin is a rail to rail, back to back output supplied by V_{3v3}.

Figure 35. GPIO[5] block diagram

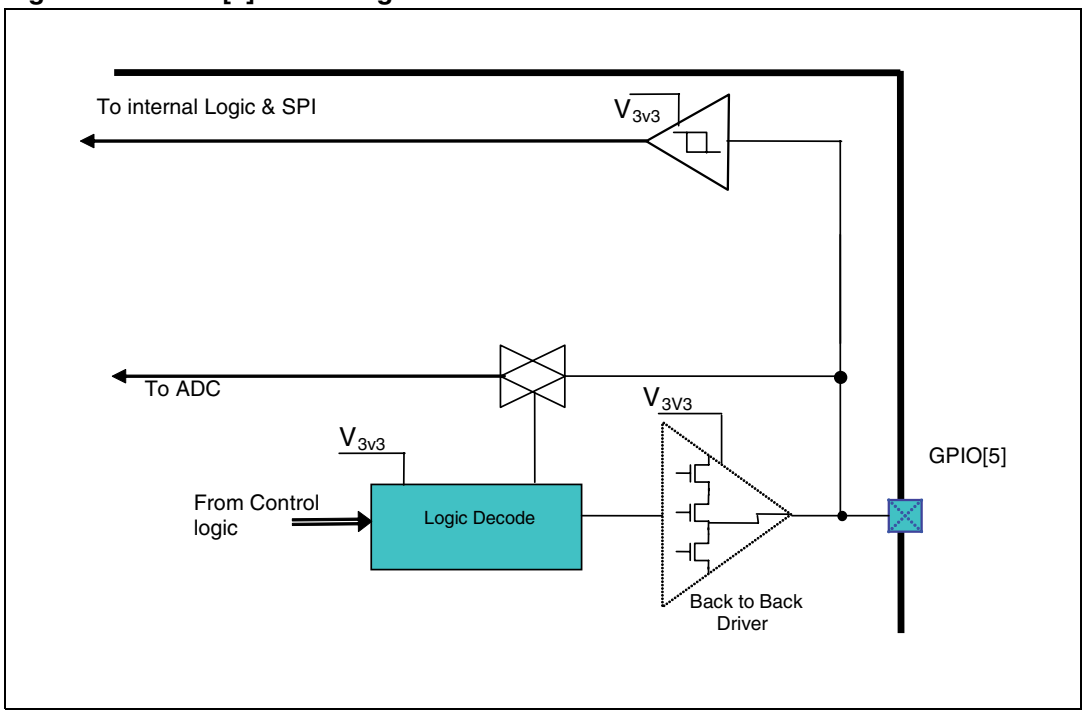

22.7 GPIO[6]

The GPIO[6] truth table is (for the abbreviation list please refer to *Table 40*):

Table 47. GPIO[6] truth table

StdByMode	AEnLow VSw[1]	GPIO[6] SPI BITS				Function	Note
		GpioOut enable[6]	Mode[2]	Mode[1]	Mode[0]		
1	X	X	X	X	X	Low Volt. Pow. Sw. 1	
0	1	X	X	X	X	Low Volt. Pow. Sw. 1	(1)
0	0	0	X	X	X	HiZ (SPI_IN)	
0	0	1	0	0	0	SPI OUT	(2)
0	0	1	0	0	1	A2DGpo	(2)
0	0	1	0	1	0	AuxPwm2	(2)
0	0	1	0	1	1	Comp2OUT	(2)
0	0	1	1	0	0	A2DGpo inverted	(2)
0	0	1	1	0	1	AuxGpPwm2 inverted	(2)
0	0	1	1	1	1	Comp2OUT inverted	(2)

1. When EnLowVSw[1]= ‘1’ the GpioOutEnable[6] bit is forced to 0.
2. In all configurations in which GPIO[6] is enabled as output:
   a) the GPIO[6] pin can be always used as an analog input to the ADC system (ADC function) by writing its address in the A2DChannelX[4:0] in the A2DConfigX register and starting a conversion;
   b) the GPIO[6] pin can be always used as a digital input so its value can be always read through SPI interface (SPI_IN function);
   c) the GPIO[6] pin is a rail to rail output supplied by V_{GPIO_SPI}.

Figure 36. GPIO[6] block diagram

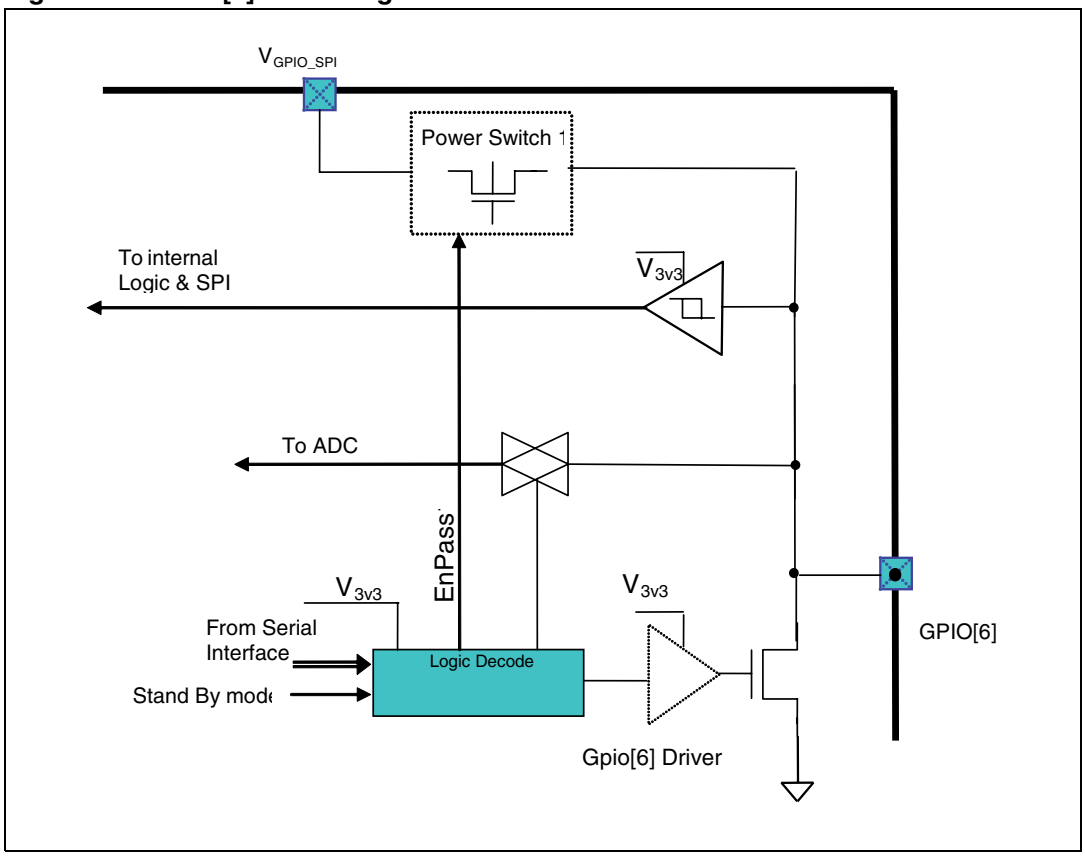

22.8 GPIO[7]

The GPIO[7] truth table is (for the abbreviation list please refer to *Table 40*).

Table 48. GPIO[7] truth table

EnLowVSw[2]	GPIO[7] SPI BITS				Function	Note
	GpioOut enable[7]	Mode[2]	Mode[1]	Mode[0]		
1	X	X	X	X	Low Volt. Pow. Sw. 2	(1)
0	0	X	X	X	HiZ (SPI_IN)	
0	1	0	0	0	SPI OUT	(2)
0	1	0	0	1	AuxPwm1	(2)
0	1	0	1	0	AuxPwm3	(2)
0	1	0	1	1	Comp1OUT	(2)
0	1	1	0	0	AuxPwm1 inverted	(2)
0	1	1	0	1	AuxPwm3 inverted	(2)
0	1	1	1	1	Comp1OUT inverted	(2)

1. When EnLowVSw[2] = ‘1’ the GpioOutEnable[7] bit is forced to 0.
2. In all configurations in which GPIO[7] is enabled as output:
   a) the GPIO[7] pin can be always used as an analog input to the ADC system (ADC function) by writing its address in the A2DChannelX[4:0] in the A2DConfigX register and starting a conversion;
   b) the GPIO[7] pin can be always used as a digital input so its value can be always read through SPI interface (SPI_IN function);
   c) the GPIO[7] pin is a rail to rail output supplied by V_{GPIO_SPI}.

Figure 37. GPIO[7] block diagram

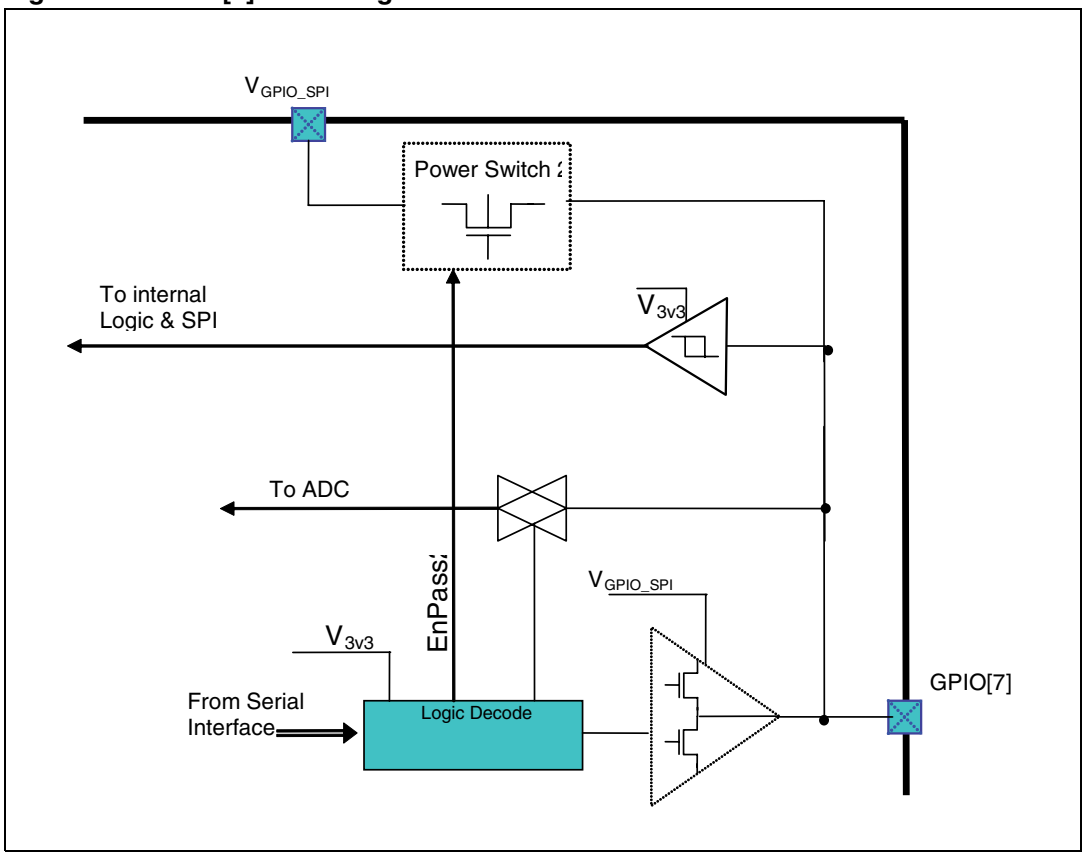

22.9 GPIO[8]

The GPIO[8] truth table is (for the abbreviation list please refer to *Table 40*).

Table 49. GPIO[8] truth table

EnDac (1)	GPIO[8] SPI bits				Function (2)	Note
	GpioOut enable[8]	Mode[2]	Mode[1]	Mode[0]		
1	X	X	X	X	CurrDAC	(3)
0	0	X	X	X	HiZ (SPI_IN)	(4)
0	1	0	0	0	SPI OUT	(4)
0	1	0	0	1	AuxPwm1	(4)
0	1	0	1	0	AuxPwm3	(4)
0	1	0	1	1	Comp2OUT	(4)
0	1	1	0	0	AuxPwm1 inverted	(4)
0	1	1	0	1	AuxPwm3 inverted	(4)
0	1	1	1	1	Comp2OUT inverted	(4)

1. The EnDAC bit in the CurrDacCtrl register enables the Current DAC (see *Chapter 17*)
2. This pin is 5 volt input tolerant.
3. When EnDAC = '1' the GpioOutEnable[8] bit is forced to 0. The current DAC circuit is directly connected to GPIO[8] pin so as soon as it is enabled it will sink current from pin.
4. The GPIO[8] pin can be always used as a digital input so its value can be always read through SPI interface (SPI_IN function). To avoid affecting the precision of CurrDAC when this is used to sink very low currents, it is necessary to enable the digital input functionality of GPIO[8]. Therefore to read their values through SPI interface (SPI_IN function), it is necessary to enable the EnGpio8DigIn bit in the CurrDacCtrl register.

Figure 38. GPIO[8] block diagram

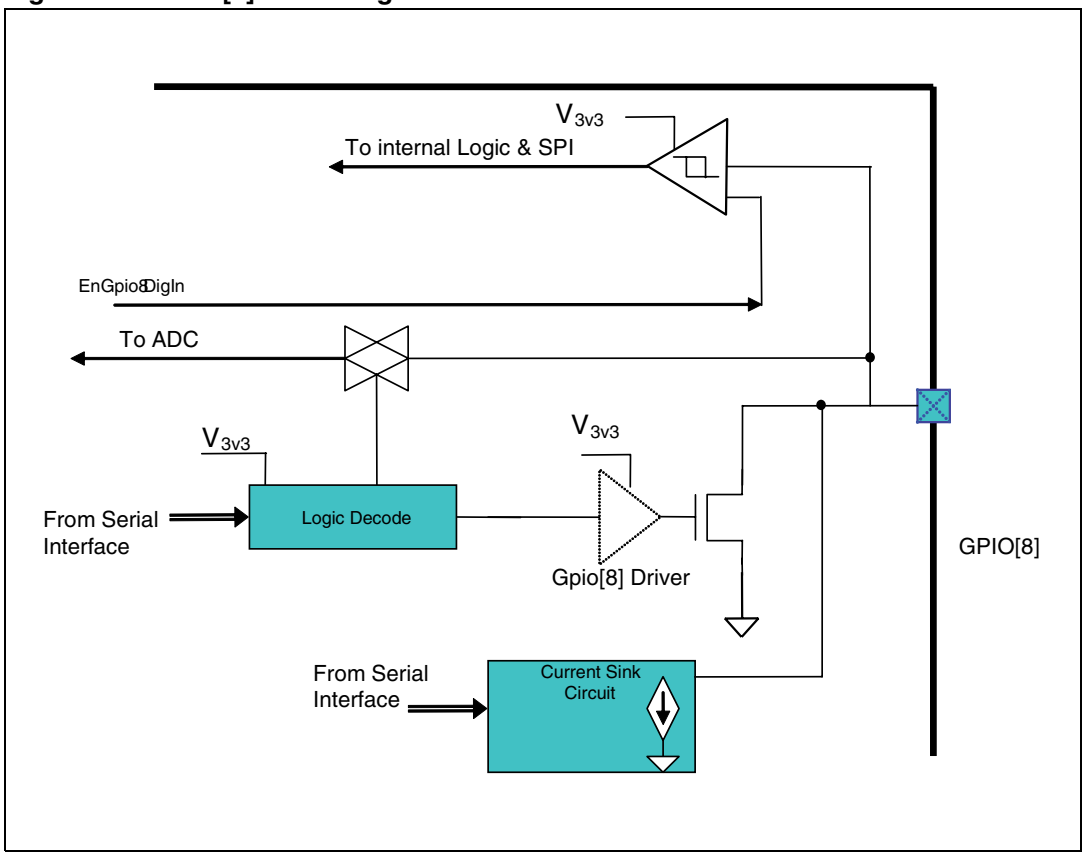

22.10 GPIO[9]

The GPIO[9] truth table is (for the abbreviation list please refer to *Table 40*).

Table 50. GPIO[9] truth table

Op1EnPlusPin(1)	GPIO[9] SPI bits				Function (2)	Note
	GpioOut enable[9]	Mode[2]	Mode[1]	Mode[0]		
1	X	X	X	X	OpAmp1 in+	(3)
0	0	X	X	X	HiZ (SPI_IN)	
0	1	0	0	0	SPI OUT	(4)
0	1	0	0	1	Interrupt Ctrl	(4)
0	1	0	1	0	AuxPwm2	(4)
0	1	0	1	1	Reg Loop 3	(4)
0	1	1	0	0	Interrupt Ctrl inverted	(4)
0	1	1	0	1	AuxPwm2 inverted	(4)
0	1	1	1	1	Reg Loop 3 inverted	(4)

1. The Op1EnPlusPin bit in the OpAmp1Ctrl register enables the connection of the positive input of Op1 to GPIO[9] pin.
2. The GPIO[9] pin is used by the system when firmware requires the ID read action (*Chapter 25*)
3. When Op1EnPlusPin = ‘1’ the GpioOutEnable[9] bit is forced to 0.
4. In all configurations in which GPIO[9] is enabled as output:

   a)the GPIO[9] pin can be always used as an analog input to the ADC system (ADC function) by writing its address in the A2DChannelX[4:0] in the A2DConfigX register and starting a conversion;

   b) the GPIO[9] pin can be always used as a digital input so its value can be always read through SPI interface (SPI_IN function);

   c)please note that GPIO[9] output is directly connected to ExtPWM1 input for Bridge 1 or 2 and therefore particular care must be taken in order to avoid wrong PWM signals when ExtPWM1 is selected for bridge 1 or 2;

   d)the GPIO[9] pin is a rail to rail output supplied by V_{GPIO_SPI}.

Figure 39. GPIO[9] block diagram

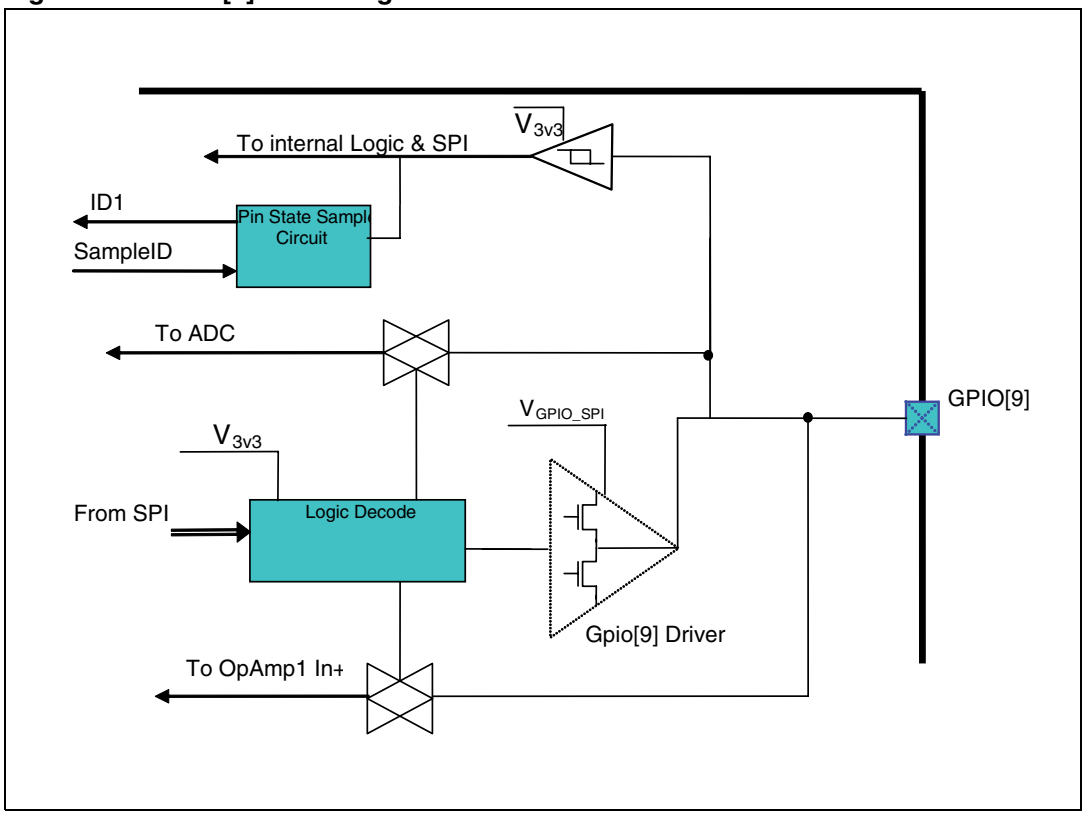

22.11 GPIO[10]

The GPIO[10] truth table is (for the abbreviation list please refer to *Table 40*).

Table 51. GPIO[10] truth table

Op1EnPlusPin(1)	GPIO[10] SPI bits				Function (2)	Note
	GpioOut enable[10]	Mode[2]	Mode[1]	Mode[0]		
1	X	X	X	X	OpAmp1 in-	(3)
0	0	X	X	X	HiZ (SPI_IN)	
0	1	0	0	0	SPI OUT	(4)
0	1	0	0	1	Interrupt Ctrl	(4)
0	1	0	1	0	AuxPwm2	(4)
0	1	0	1	1	AuxPwm3	(4)
0	1	1	0	0	Interrupt Ctrl inverted	(4)
0	1	1	0	1	AuxPwm2 inverted	(4)
0	1	0	0	0	AuxPwm3 inverted	(4)

1. The Op1EnMinusPin bit in the OpAmp1Ctrl register enables the connection of the positive input of Op1 to GPIO[10] pin.
2. The GPIO[10] pin is used by the system when firmware requires the ID read action (*Chapter 25*)
3. When Op1EnPlusPin = ‘1’ the GpioOutEnable[10] bit is forced to 0.
4. In all configurations in which GPIO[10] is enabled as output:
   a) the GPIO[10] pin can be always used as an analog input to the ADC system (ADC function) by writing its address in the A2DChannelX[4:0] in the A2DConfigX register and starting a conversion;
   b) the GPIO[10] pin can be always used as a digital input so its value can be always read through SPI interface (SPI_IN function);
   c) please note that GPIO[10] output is directly connected to ExtPWM2 input for bridge 1 or 2 and therefore particular care must be taken in order to avoid wrong PWM signals when ExtPWM2 is selected for bridge 1 or 2;
   d) the GPIO[10] pin is a rail to rail output supplied by V_{GPIO_SPI}.

Figure 40. GPIO[10] block diagram

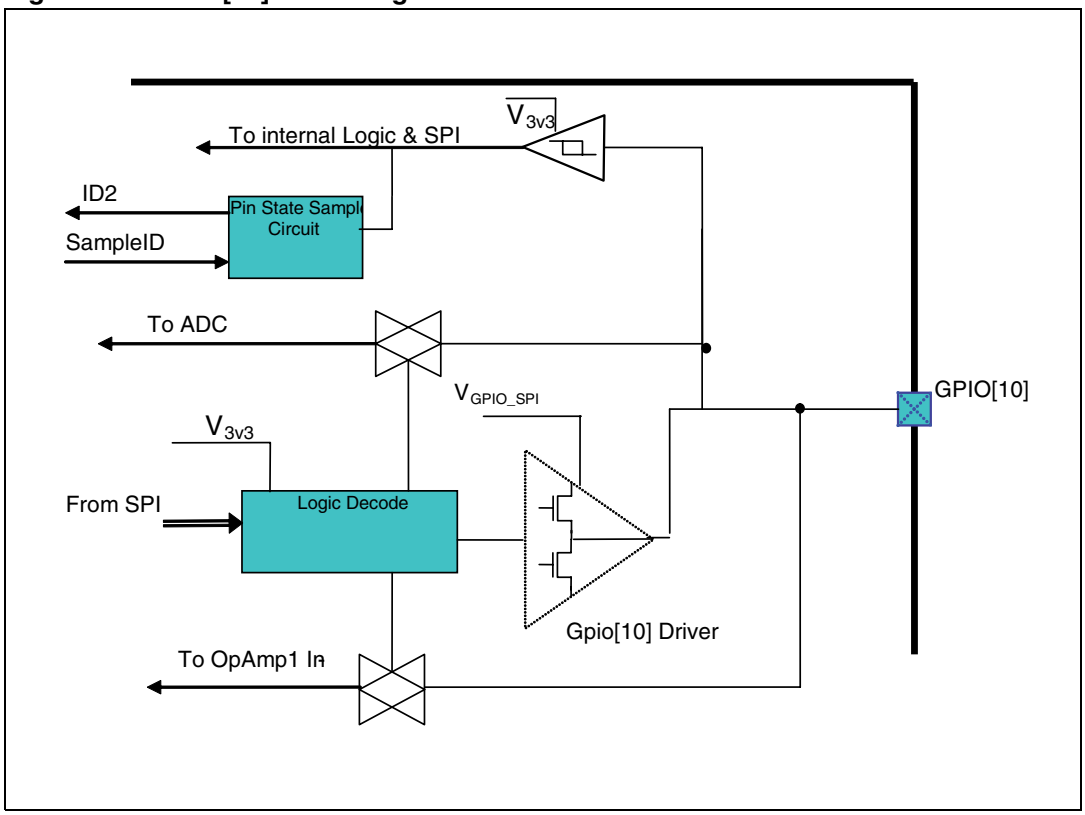

22.12 GPIO[11]

The GPIO[11] truth table is (for the abbreviation list please refer to *Table 40*).

Table 52. GPIO[11] truth table

EnOpl (1)	GPIO[11] SPI bits				Function	Note
	GpioOut enable[11]	Mode[2]	Mode[1]	Mode[0]		
1	X	X	X	X	OpAmp1 Out	(2)
0	0	X	X	X	HiZ (SPI_IN)	
0	1	0	0	0	SPI OUT	(3)
0	1	0	0	1	A2DGpo	(3)
0	1	0	1	0	AuxPwm1	(3)
0	1	0	1	1	AuxPwm2	(3)
0	1	1	0	0	SPI OUT inverted	(3)
0	1	1	0	1	A2DGpo inverted	(3)
0	1	1	1	0	AuxPwm1 inverted	(3)
0	1	1	1	1	AuxPwm2 inverted	(3)

1. The EnOp1 bit in the OpAmp1Ctrl register enables the operational amplifier 1.
2. When EnOp1 = ‘1’ the GpioOutEnable[11] bit is forced to 0.
3. In all configurations in which GPIO[11] is enabled as output:
   a) the GPIO[11] pin can be always used as an analog input to the ADC system (ADC function) by writing its address in the A2DChannelX[4:0] in the A2DConfigX register and starting a conversion;
   b) the GPIO[11] pin can be always used as a digital input so its value can be always read through SPI interface (SPI_IN function);
   c) please note that GPIO[11] output is directly connected to ExtPWM4 input for bridge 3 or 4 and therefore particular care must be taken in order to avoid wrong PWM signals when ExtPWM4 is selected for bridge 3 or 4;
   d) the GPIO[11] pin is a rail to rail output supplied by V_{GPIO_SPI}.

Figure 41. GPIO[11] block diagram

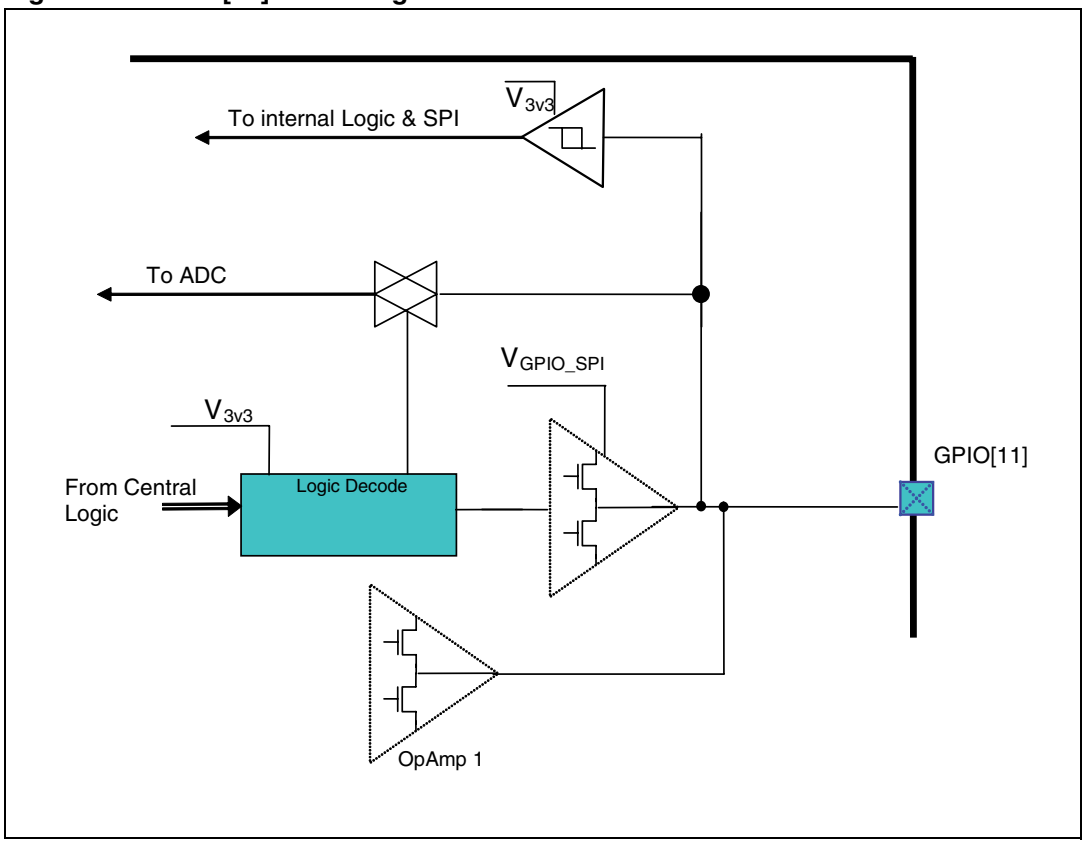

22.13 GPIO[12]

The GPIO[12] truth table is (for the abbreviation list please refer to *Table 40*.

Table 53. GPIO[12] truth table

AUX2enable or AUX2system (1)	Op2En PlusPin	GPIO[12] SPI bits				Function	Note
		GpioOut enable[12]	Mode[2]	Mode[1]	Mode[0]		
1	X	X	X	X	X	RegLoop2	
0	1	X	X	X	X	OpAmp2 in+	(2)
0	0	0	X	X	X	HiZ (SPI_IN)	
0	0	1	0	0	0	SPI OUT	(3)
0	0	1	0	0	1	Interrupt Ctrl	(3)
0	0	1	0	1	0	Comp2OUT	(3)
0	0	1	0	1	1	RegLoop2	(3)
0	0	1	1	0	0	Interrupt Ctrl inverted	(3)
0	0	1	1	0	1	Comp2OUT inverted	(3)
0	0	1	1	1	1	RegLoop2 inverted	(3)

1. AUX2Enable or AUX2System bit =1 represent the case in which AUX2 is used as a regulator (system or not system).
2. When Op2EnPlusPin = ‘1’ the GpioOutEnable[11] bit is forced to 0.
3. In all configurations in which GPIO[12] is enabled as output:
   a) the GPIO[12] pin can be always used as an analog input to the ADC system (ADC function) by writing its address in the A2DChannelX[4:0] in the A2DConfigX register and starting a conversion;
   b) the GPIO[12] pin can be always used as a digital input so its value can be always read through SPI interface (SPI_IN function);
   c) please note that GPIO[12] output is directly connected to StepCmd input for stepper driver and therefore particular care must be taken in order to avoid wrong PWM signals when StepCmd is selected for stepper driver (STEP_REQUEST function)
   d) the GPIO[12] pin is a rail to rail, back to back output supplied by V_{GPIO_SPI}.

Figure 42. GPIO[12] block diagram

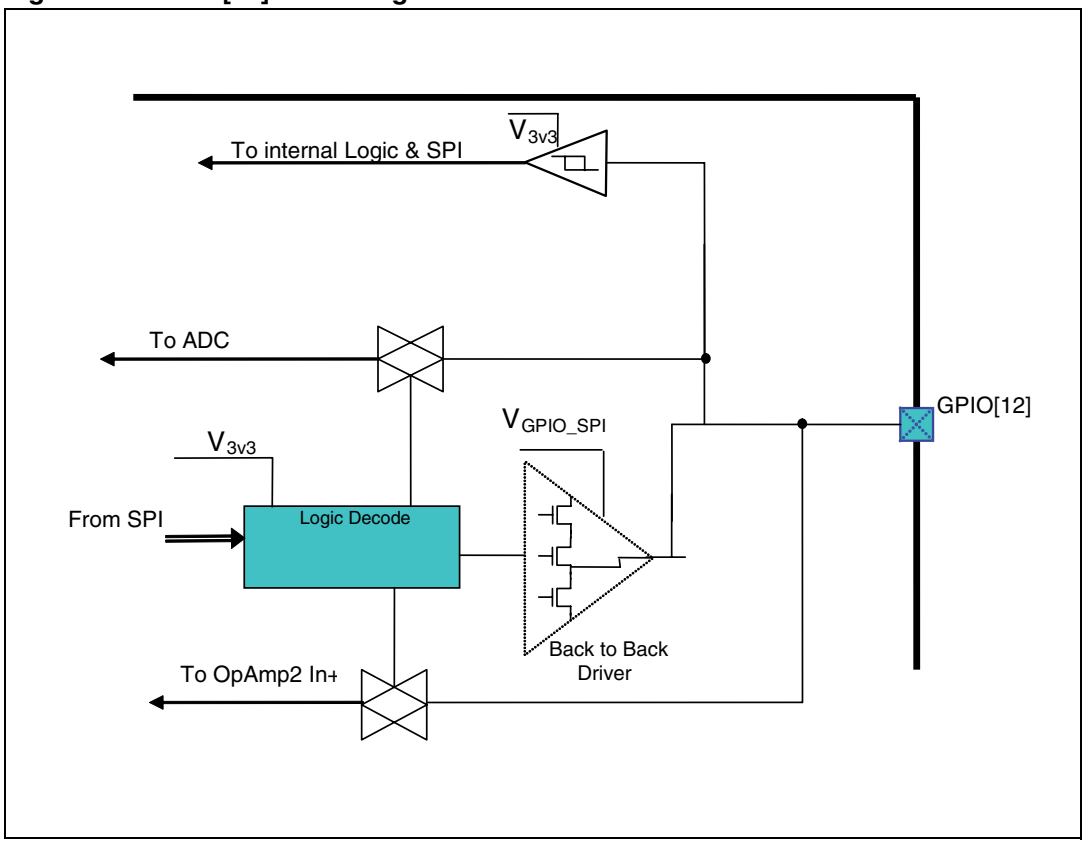

22.14 GPIO[13]

The GPIO[13] truth table is (for the abbreviation list please refer to *Table 40*).

Table 54. GPIO[13] truth table

Op2En mimusPin(1)	GPIO[13] SPI BITS				Function	Note
	GpioOut enable[13]	Mode[2]	Mode[1]	Mode[0]		
1	X	X	X	X	OpAmp2 in-	(2)
0	0	X	X	X	HiZ (SPI_IN)	
0	1	0	0	0	SPI OUT	(3)
0	1	0	0	1	AuxPwm1	(3)
0	1	0	1	0	Reg Loop 3	(3)
0	1	0	1	1	AuxPwm3	(3)
0	1	1	0	0	AuxPwm1 inverted	(3)
0	1	1	0	1	Reg Loop 3 inverted	(3)
0	1	1	1	1	AuxPwm3 inverted	(3)

1. The Op2EnMinusPin bit in the OpAmp2Ctrl register enables the connection of the positive input of Op1 to GPIO[13] pin.
2. When Op2EnMinusPin = ‘1’ the GpioOutEnable[13] bit is forced to 0.
3. In all configurations in which GPIO[9] is enabled as output:
   a) the GPIO[13] pin can be always used as an analog input to the ADC system (ADC function) by writing its address in the A2DChannelX[4:0] in the A2DConfigX register and starting a conversion;
   b) the GPIO[13] pin can be always used as a digital input so its value can be always read through SPI interface (SPI_IN function);
   c) the GPIO[13] pin is a rail to rail output supplied by V_{GPIO_SPI}.

Figure 43. GPIO[13] block diagram

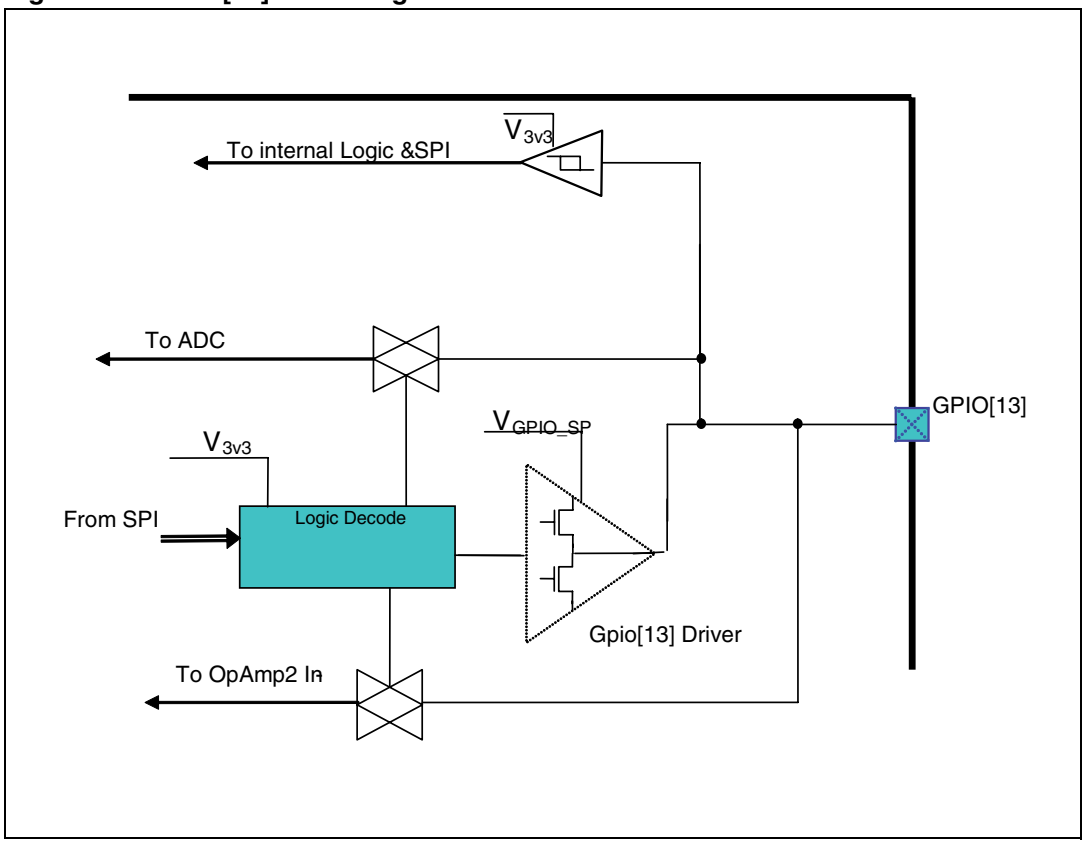

22.15 GPIO[14]

The GPIO[14] truth table is (for the abbreviation list please refer to *Table 40*).

Table 55. GPIO[14] truth table

EnOp2[1]	GPIO[14] SPI bits				Function	Note
	GpioOut enable[14]	Mode[2]	Mode[1]	Mode[0]		
1	X	X	X	X	OpAmp2 Out	(2)
0	0	X	X	X	HiZ (SPI_IN)	
0	1	0	0	0	SPI OUT	(3)
0	1	0	0	1	Interrupt Ctrl	(3)
0	1	0	1	0	AuxPwm2	(3)
0	1	0	1	1	AuxPwm3	(3)
0	1	1	0	0	SPI OUT inverted	(3)
0	1	1	0	1	Interrupt Ctrl inverted	(3)
0	1	1	1	0	AuxPwm2 inverted	(3)
0	1	1	1	1	AuxPwm3 inverted	(3)

1. The EnOp2 bit in the OpAmp2Ctrl register enables the operational amplifier 2.
2. When EnOp2 = ‘1’ the GpioOutEnable[14] bit is forced to 0.
3. In all configurations in which GPIO[14] is enabled as output:
   a) the GPIO[14] pin can be always used as an analog input to the ADC system (ADC function) by writing its address in the A2DChannelX[4:0] in the A2DConfigX register and starting a conversion;
   b) the GPIO[14] pin can be always used as a digital input so its value can be always read through SPI interface (SPI_IN function);
   c) the GPIO[14] pin is a rail to rail output supplied by V_{GPIO_SPI}.

Figure 44. GPIO[14] block diagram

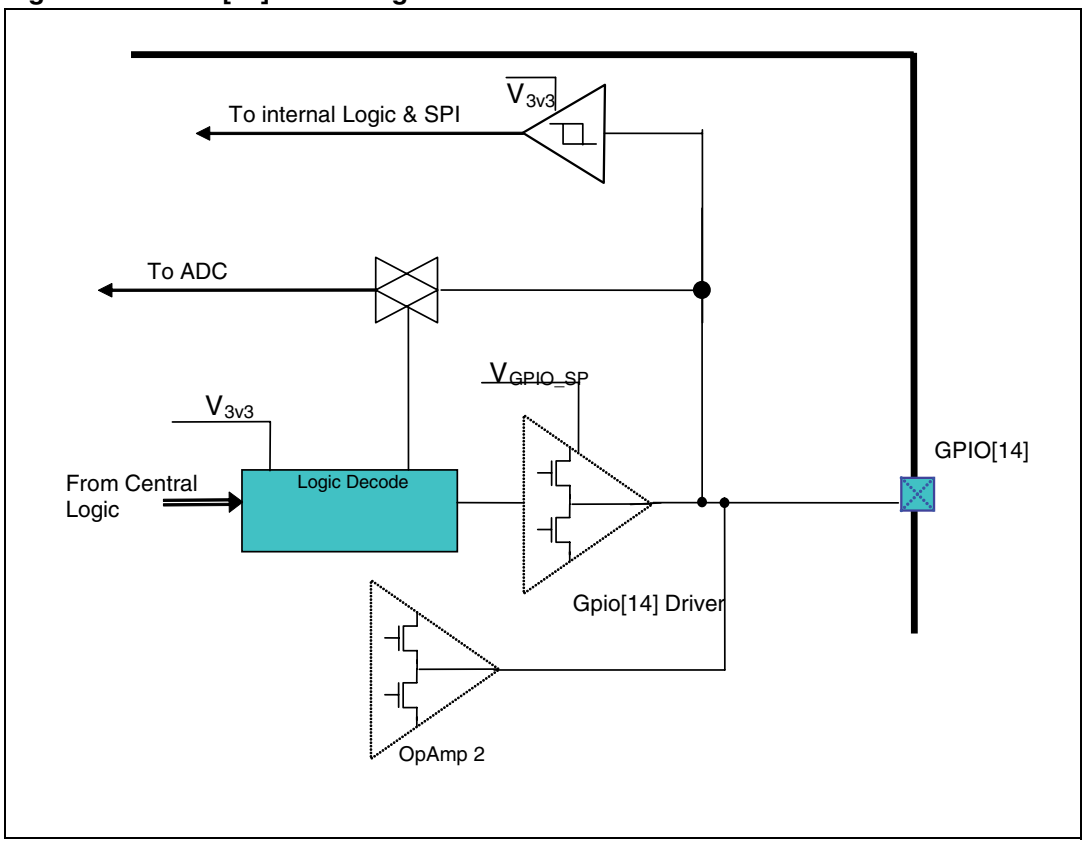

23 Serial interface

L6460 can communicate with an external microprocessor by using an integrated slave SPI (serial protocol interface). Through this interface almost all L6460 functionalities can be controlled and all the ICs can be seen as a register map made by 128 register of 16-bit each.

The SPI is a simple industry standard communications interface commonly used in embedded systems and it has the following four I/O pins:

- MISO (master input slave output)
- MOSI (master output slave input)
- SCLK (serial clock [controlled by the master])
- nSS (slave select active low [controlled by the master])

The “MISO” (master in, slave out) signal carries synchronous data from the slave to the master device. The MOSI (master out, slave in) signal carries synchronous data from the master to the slave device. The SCLK signal is driven by the master, synchronizing all data transfers. Each SPI slave device has one nSS signal that is an active-low slave input/master output pin. Slave devices do not respond to transactions unless their nSS input signal is driven low. Master device interfacing with multiple SPI slave devices has an nSS signal for each slave device.

L6460 will maintain its MISO pin in high impedance until it does not recognize its address in serial frame.

23.1 Read transaction

A read transaction (see *Figure 45*) is always started by the master device that lowers the nSS pin. The other bits are then sent on the MOSI pin with this order:

1. 7-bit representing the address of the register that must be read (MSB first [A_6…A_0]);
2. 2-bit that must be “10” for a read transaction;
3. 2-bit representing L6460 IC address;
4. 1-bit reserved for future use that must be set at “0”.

At this point the data stored in the register at the selected address will be shifted out on the MISO pin.

The read operation is terminated by raising the signal on nSS pin.

Figure 45. SPI read transaction

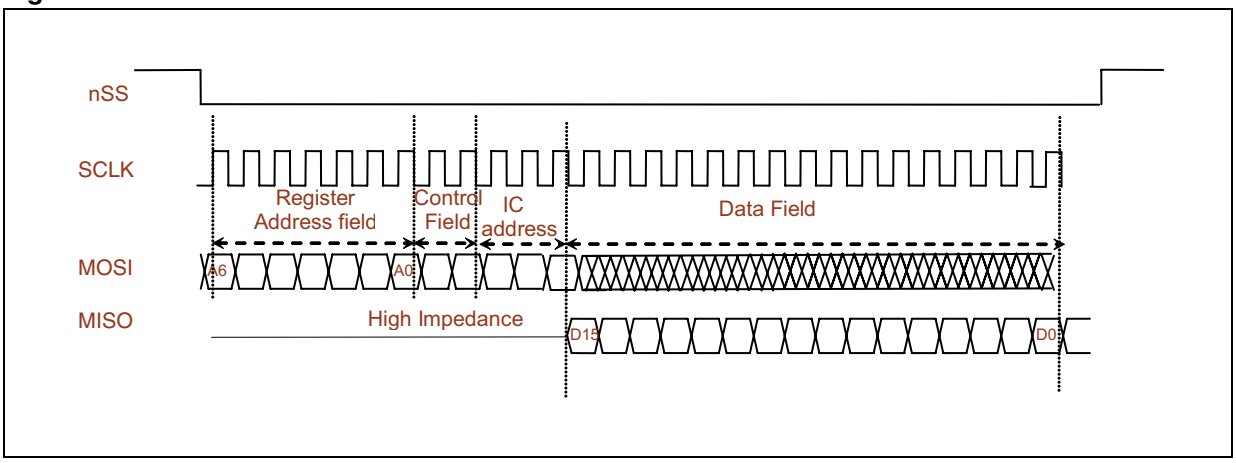

23.2 Write transaction

A write transaction (see *Figure 46*) is always started by the master lowering the signal on nSS pin. The other bits are then sent on the MOSI pin with this order:

1. 7-bit representing the address of the register that must be written (MSB first [A6…A0]);
2. 2-bit that must be “01” for a read transaction;
3. 2-bit representing L6460 IC address;
4. 1-bit reserved for future use that must be set at “0”.

The data to be written (MSB first D15…D0) are then read from MOSI pin. The length of data field can be 16 or 20 bits, but only the first 16-bit are accepted as valid data. Data is latched on rising edge of the nSS line.

Figure 46. SPI write transaction

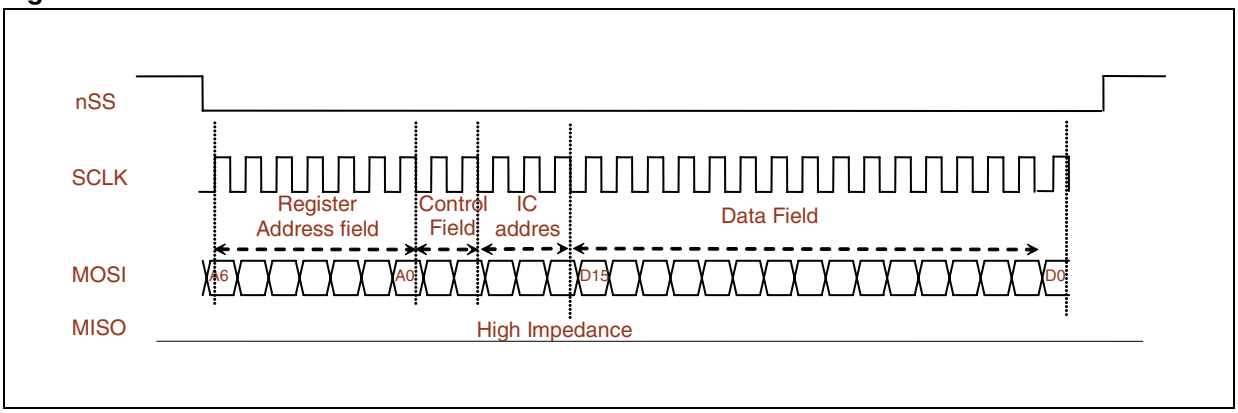

The SPI input and output timing definitions are shown in the *Table 5 on page 17*

Figure 47. SPI input timing diagram

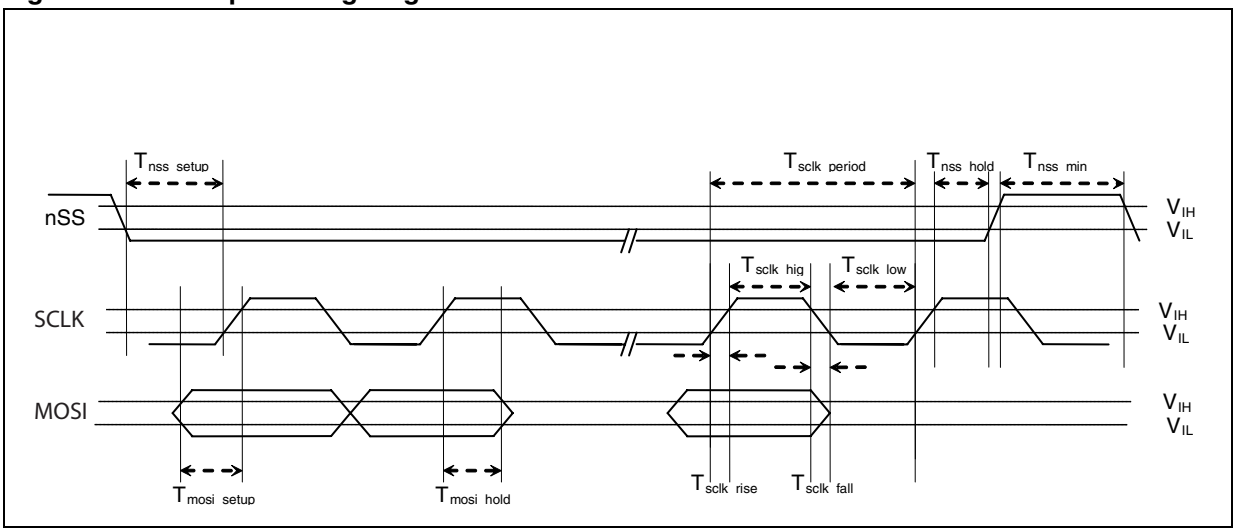

Figure 48. SPI output timing diagram

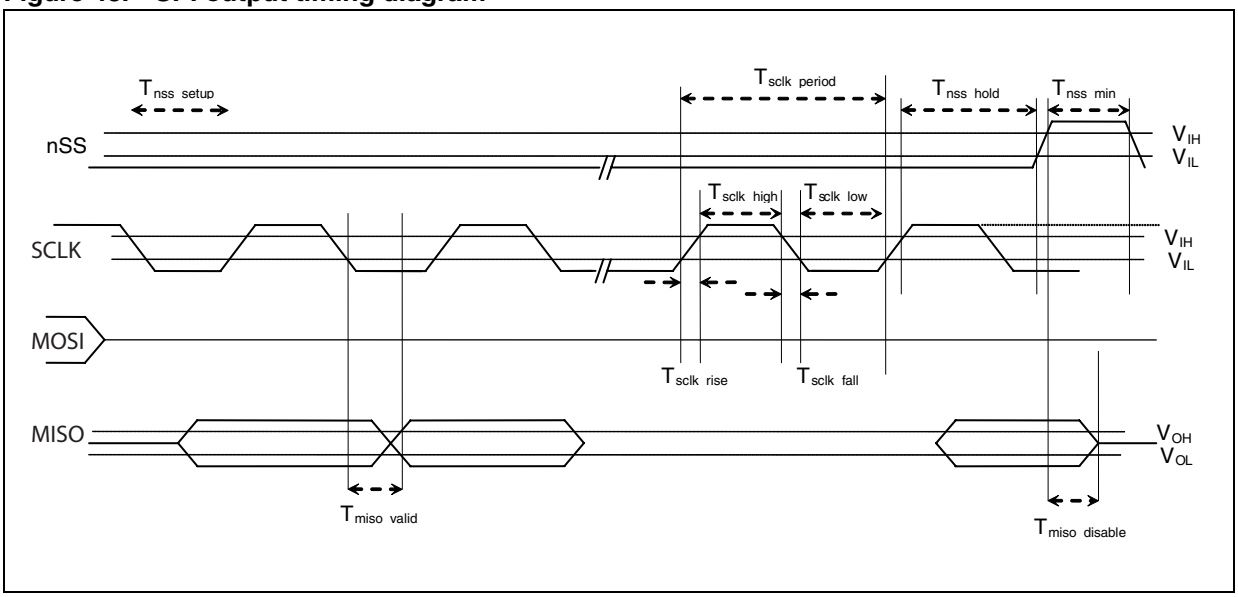

24 Registers list

Many of the L6460 functionalities are controlled or can be supervised by accessing to the relative register through serial interface. All these registers can be seen from the user (microcontroller) point of view as a register table. Each register is one word wide (16-bit) and can be read using a 7-bit address

Table 56. Register address map

Address[6:0] (binary)	Name	Comment	Address[6:0] (binary)	Name	Comment
000_0000	DevName	Read only	100_0000	AuxPwm1Ctrl	
000_0001	CoreConfigReg		100_0001	AuxPwm2Ctrl	
000_0010	ICTemp		100_0010	GpPwm3Base	
000_0011	ICStatus		100_0011	GpPwm3Ctrl	
000_0100	EnTestRegs		100_0100		
000_0101	SampleID		100_0101		
000_0110	WatchDogCfg		100_0110	IntCtrlCfg	
000_0111	WatchDogStatus		100_0111	IntCtrlCtrl	
000_1000	SoftResReg		100_1000	DigCmpCfg	
000_1001			100_1001	DigCmpValue	
000_1010			100_1010		
000_1011			100_1011		
000_1100	HibernateStatus		100_1100		
000_1101	HibernateCmd		100_1101		
000_1110			100_1110		
000_1111	Mtr1_2PwrCtrl		100_1111		
001_0000	MainVSwCfg		101_0000	A2DControl	
001_0001			101_0001	A2DConfig1	
001_0010	MainlinCfg		101_0010	A2DResult1	
001_0011			101_0011	A2DConfig2	
001_0100	SwCtrCfg		101_0100	A2DResult2	
001_0101			101_0101		
001_0110			101_0110		
001_0111			101_0111		
001_1000	StdByMode		101_1000	GpioOutEnable	
001_1001			101_1001	GpioCtrl1	
001_1010			101_1010	GpioCtrl2	
001_1011			101_1011	GpioCtrl3	

Table 56. Register address map (continued)

Address[6:0] (binary)	Name	Comment	Address[6:0] (binary)	Name	Comment
001_1100			101_1100	GpioPadVal	Read only
001_1101			101_1101	GpioOutVal	
001_1110			101_1110		
001_1111			101_1111		
010_0000	Mtrs1_2Cfg		110_0000	LowVSwitchCtrl	
010_0001	Mtr1Cfg		110_0001		
010_0010	Mtr1Ctrl		110_0010		
010_0011	Mtr1Limit		110_0011		
010_0100	Mtr2Cfg		110_0100	OpAmpCtrl1	
010_0101	Mtr2Ctrl		110_0101	OpAmpCtrl2	
010_0110	Mtr2Limit		110_0110		
010_0111			110_0111		
010_1000	Mtrs3_4Cfg		110_1000		
010_1001	Mtr3Cfg		110_1001		
010_1010	Mtr3Ctrl		110_1010		
010_1011	Mtr3ILimit		110_1011		
010_1100	Mtr4Cfg		110_1100		
010_1101	Mtr4Ctrl		110_1101		
010_1110	Mtr4ILimit		110_1110		
010_1111			110_1111		
011_0000	StpCfg1		111_0000		
011_0001	StpCfg2		111_0001		
011_0010	StpCtrl		111_0010		
011_0011	StpCmd		111_0011		
011_0100	StpTest		111_0100		
011_0101	Aux1SwCfg		111_0101		
011_0110	Aux2SwCfg		111_0110		
011_0111	Aux3SwCfg1		111_0111		
011_1000	Aux3SwCfg2		111_1000		
011_1001	Power Mode Control		111_1001		
011_1010			111_1010		
011_1011			111_1011	REV_MFCT	
011_1100	CurrDacCtrl		111_1100	RESERVED	

Table 56. Register address map (continued)

Address[6:0] (binary)	Name	Comment	Address[6:0] (binary)	Name	Comment
011_1101			111_1101	RESERVED	
011_1110			111_1110	RESERVED	
011_1111			111_1111	RESERVED	

25 Schematic examples

Figure 49. Application with 2 DC motors, 1 stepper motor and 3 power supplies

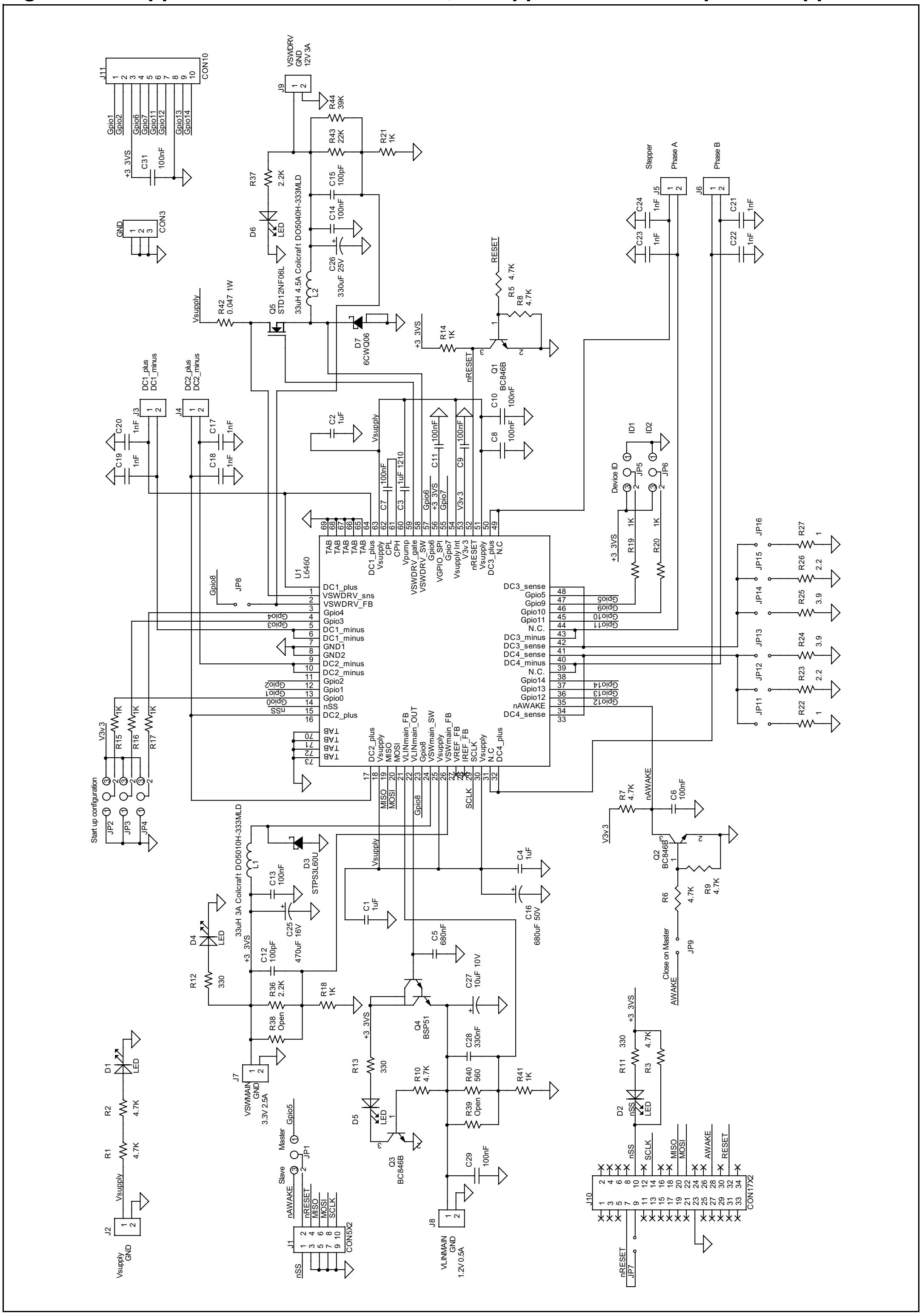

Figure 50. Application with 2 DC motors, a battery charger and 5 power supplies

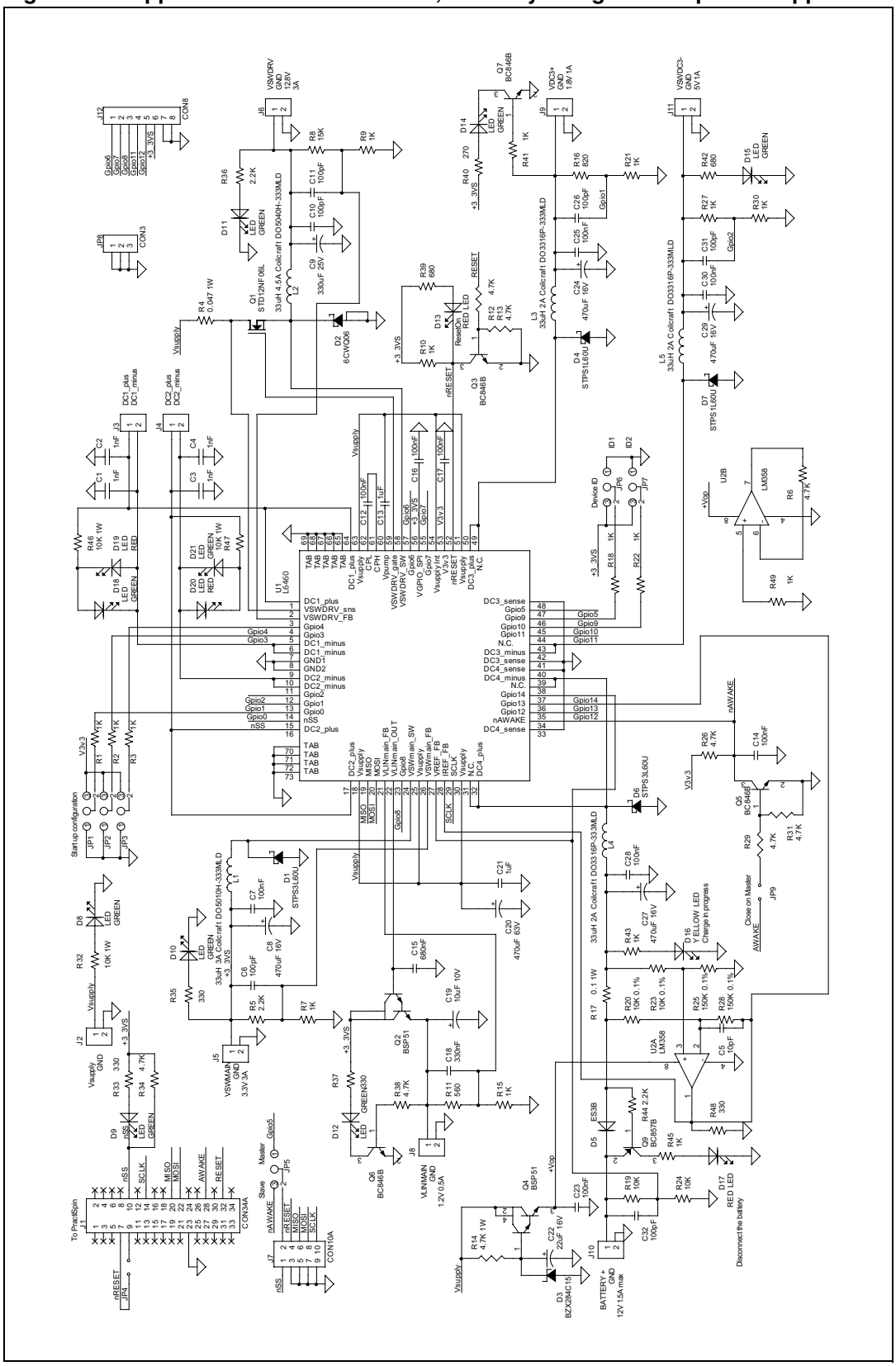

26 Package mechanical data

In order to meet environmental requirements, ST offers these devices in different grades of ECOPACK® packages, depending on their level of environmental compliance. ECOPACK® specifications, grade definitions and product status are available at: www.st.com. ECOPACK is an ST trademark.

Figure 51. TQFP64 mechanical data an package dimensions

DIM.	mm			inch		
	MIN.	TYP.	MAX.	MIN.	TYP.	MAX.
A			1.20			0.0472
A1	0.05		0.15	0.002		0.006
A2	0.95	1.00	1.05	0.0374	0.0393	0.0413
b	0.17	0.22	0.27	0.0066	0.0086	0.0086
c	0.09		0.20	0.0035		0.0078
D	11.80	12.00	12.20	0.464	0.472	0.480
D1	9.80	10.00	10.20	0.386	0.394	0.401
D2	2.00			0.787		
D3		7.50			0.295	
E	11.80	12.00	12.20	0.464	0.472	0.480
E1	9.80	10.00	10.20	0.386	0.394	0.401
E2	2.00			0.787		
E3		7.50			0.295	
e		0.50			0.0197	
L	0.45	0.60	0.75	0.0177	0.0236	0.0295
L1		1.00			0.0393	
k	0°	3.5°	7°	0°	3.5°	7°
ccc			0.080			0.0031

OUTLINE AND MECHANICAL DATA

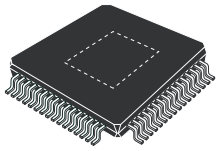

TQFP64 (10x10x1.0mm)
Exposed Pad Down

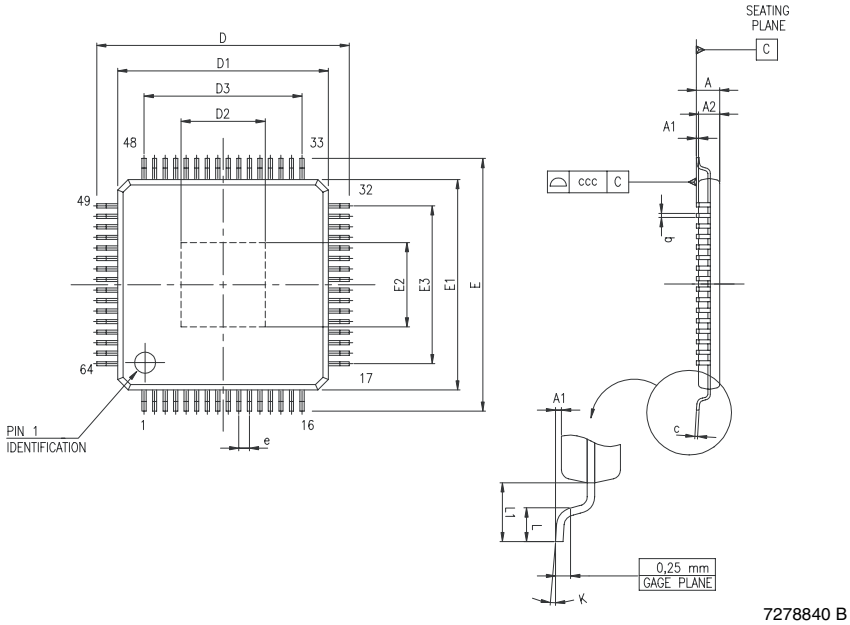

27 Revision history

Table 57. Document revision history

Date	Revision	Changes
02-Jul-2010	1	Initial release.

Please Read Carefully:

Information in this document is provided solely in connection with ST products. STMicroelectronics NV and its subsidiaries (“ST”) reserve the right to make changes, corrections, modifications or improvements, to this document, and the products and services described herein at any time, without notice.

All ST products are sold pursuant to ST’s terms and conditions of sale.

Purchasers are solely responsible for the choice, selection and use of the ST products and services described herein, and ST assumes no liability whatsoever relating to the choice, selection or use of the ST products and services described herein.

No license, express or implied, by estoppel or otherwise, to any intellectual property rights is granted under this document. If any part of this document refers to any third party products or services it shall not be deemed a license grant by ST for the use of such third party products or services, or any intellectual property contained therein or considered as a warranty covering the use in any manner whatsoever of such third party products or services or any intellectual property contained therein.

UNLESS OTHERWISE SET FORTH IN ST’S TERMS AND CONDITIONS OF SALE ST DISCLAIMS ANY EXPRESS OR IMPLIED WARRANTY WITH RESPECT TO THE USE AND/OR SALE OF ST PRODUCTS INCLUDING WITHOUT LIMITATION IMPLIED WARRANTIES OF MERCHANTABILITY, FITNESS FOR A PARTICULAR PURPOSE (AND THEIR EQUIVALENTS UNDER THE LAWS OF ANY JURISDICTION), OR INFRINGEMENT OF ANY PATENT, COPYRIGHT OR OTHER INTELLECTUAL PROPERTY RIGHT.

UNLESS EXPRESSLY APPROVED IN WRITING BY AN AUTHORIZED ST REPRESENTATIVE, ST PRODUCTS ARE NOT RECOMMENDED, AUTHORIZED OR WARRANTED FOR USE IN MILITARY, AIR CRAFT, SPACE, LIFE SAVING, OR LIFE SUSTAINING APPLICATIONS, NOR IN PRODUCTS OR SYSTEMS WHERE FAILURE OR MALFUNCTION MAY RESULT IN PERSONAL INJURY, DEATH, OR SEVERE PROPERTY OR ENVIRONMENTAL DAMAGE. ST PRODUCTS WHICH ARE NOT SPECIFIED AS "AUTOMOTIVE GRADE" MAY ONLY BE USED IN AUTOMOTIVE APPLICATIONS AT USER’S OWN RISK.

Resale of ST products with provisions different from the statements and/or technical features set forth in this document shall immediately void any warranty granted by ST for the ST product or service described herein and shall not create or extend in any manner whatsoever, any liability of ST.

ST and the ST logo are trademarks or registered trademarks of ST in various countries.

Information in this document supersedes and replaces all information previously supplied.

The ST logo is a registered trademark of STMicroelectronics. All other names are the property of their respective owners.

© 2010 STMicroelectronics - All rights reserved

STMicroelectronics group of companies

Australia - Belgium - Brazil - Canada - China - Czech Republic - Finland - France - Germany - Hong Kong - India - Israel - Italy - Japan - Malaysia - Malta - Morocco - Philippines - Singapore - Spain - Sweden - Switzerland - United Kingdom - United States of America

www.st.com